Fans for rail technology

version 2012-09

The engineer's choice

ebmpapst

ebm-papst:
Your highly competent partner in rail engineering

Significantly increased commodity flows and growing mobility due to advancing globalisation require new solutions, particularly in rail traffic. Powerful and reliable vehicle concepts provide the basis for means of transport that are more efficient and, above all, more environmentally friendly.
An essential part of this effort is cooling both diesel-powered and electrically powered rail cars as well as providing maximum comfort for passenger transportation. Precisely in this area, ebm-papst has time and again set new standards with brushless fans.

Motor technology, electronics, aerodynamics: Our advantage lies in the perfect interaction.

Leading technologies, groundbreaking application solutions, innovative products – all of these would not be possible if we did not see the big picture: aerodynamic interrelationships and therefore the perfect interplay of motor technology, electronics and aerodynamics.
Our three core competencies are in direct relationship to each other in our products. The objective is always to use air and motion as efficiently as possible, whether in the tightest spaces, in large dimensions or under extreme ambient conditions. After all, it is only in this way that our customers can obtain high-quality end products that are all of a piece;
whether they are high-performance driver's cab climate control systems and heating units, versatile passenger compartment systems or effective cooling of power electronics in locomotives.
In order to achieve an aerodynamically optimum shape for our fans, we design fan blades, impellers and ducted housings to match the relevant application environment. From seemingly small details, such as the blade-tip slip with winglets, result significant optimisations for noise reduction with even higher efficiencies. And when they are combined with intelligent electronics, the drive engineering and aerodynamics then operate as a system solution optimally matched to each other. The perfect interplay thus arises: our lead in global competition.

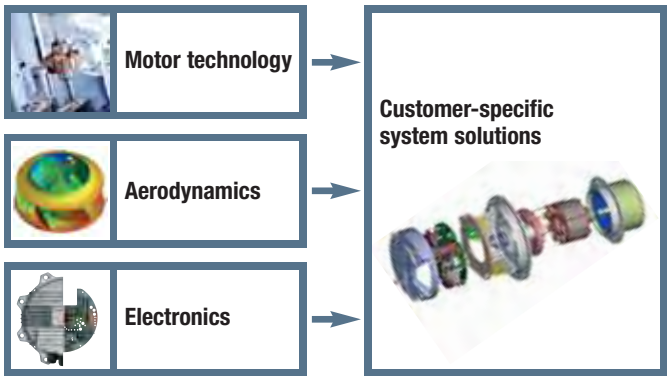

To provide you with the best solution for your rail application, we observe the following standards in developing our products:

- **IEC 61373: Shock and vibration test**
- **EN 45545: Fire protection on railway vehicles**
- **EN 15085: Welding of railway vehicles and components**
- **EN 50155: Electronic equipment used on rolling stock**
- **EN 50121: Electromagnetic compatibility**

Table of contents

Sustainability is at the centre of our thoughts and actions. Out of conviction!

Eco-friendliness and sustainability have always been at the core of our thoughts and actions. For decades, we have worked according to the simple but strict creed of our co-founder Gerhard Sturm: "Each new product we develop has to be better than the last one in terms of economy and ecology." GreenTech is the ultimate expression of our corporate philosophy.

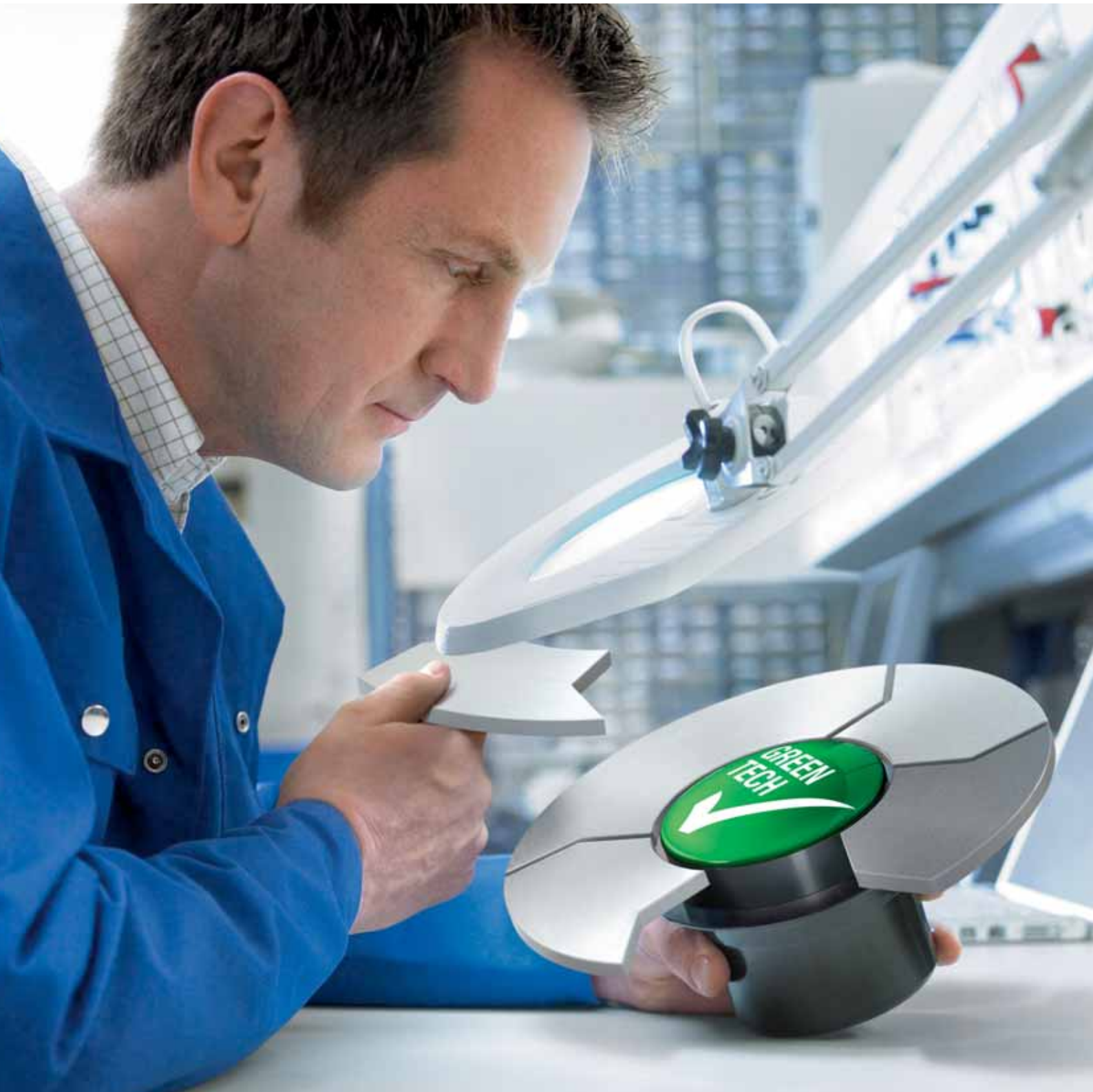

GreenTech is pro-active development.
Even in the design phase, the materials and processes we use are optimised for the greatest possible eco-friendliness, energy balance and – wherever possible – recyclability. We continually improve the material and performance of our products, as well as the flow and noise characteristics. At the same time, we significantly reduce energy consumption. Close co-operation with universities and scientific institutes and the professorship we endow in the area of power engineering and regenerative energies allows us to profit from the latest research findings in these fields – and at the same time ensure highly qualified young academics.

GreenTech is eco-friendly production.
GreenTech also stands for maximum energy efficiency in our production processes. There, the intelligent use of industrial waste heat and groundwater cooling, photovoltaics and, of course, our own cooling and ventilation technology are of the utmost importance. Our most modern plant, for instance, consumes 91% less energy than currently specified and required. In this way, our products contribute to protecting the environment, from their origin to their recyclable packaging.

GreenTech is acknowledged and certified.
Every step in our chain of production meets the stringent standards of environmental specialists and the public. The 2008 Environmental Prize of Baden-Wuerttemberg, the Green Award 2009, the Energy Efficiency Award 2009 of the dena – to give just a few examples – testify to this. The environmental advantage gained in the performance of the products developed from our GreenTech philosophy can also be measured in the fulfilment of the most stringent energy and environmental standards. In many instances, our products are already well below the thresholds energy legislation will impose a few years from now – several times over.

Our customers profit from this every day.
The heart of GreenTech is future-oriented EC technology from ebm-papst. The EC technology at the core of our most efficient motors and fans allows efficiency of up to 90%, saves energy at a very high level, significantly extends service life and makes our products maintenance-free. These values pay off not only for the environment, but every cent also pays off for the user! All ebm-papst products – even those for which GreenTech EC technology does not (yet) make sense from an application viewpoint – feature the greatest possible connection of economy and ecology.

Tractionised fans for railway applications - 24 VDC

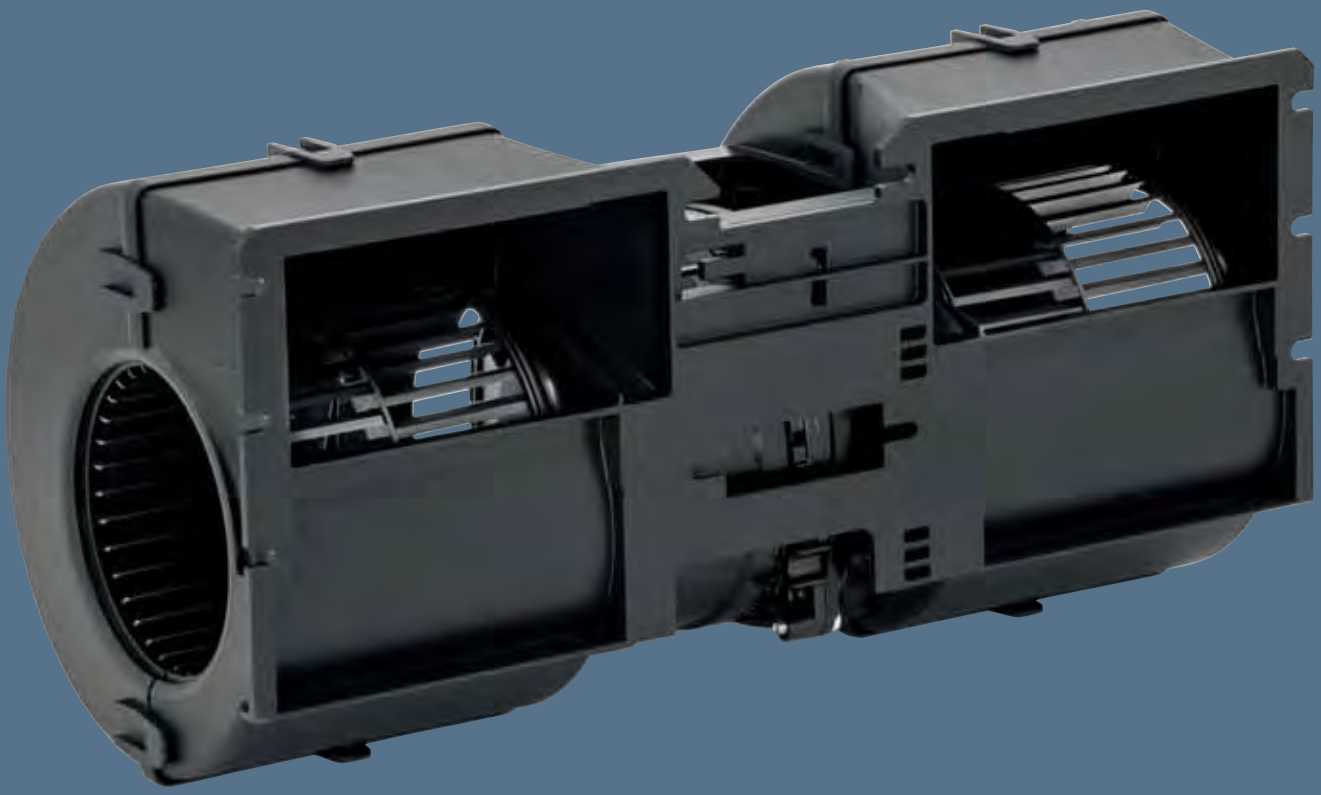

ErP2015 EXCEEDS THE NORM

EC dual centrifugal blowers

with brushless DC motor, Ø 097

- **Material:** Housing and Impeller: PA plastic – coloured black, conforms to EN 45545 (R25-HL3)
- **Connector plug:** AMP Junior Power Timer, 6-pole, coded,
- **Bearings:** Maintenance-free ball bearings on both sides
- **Motor protection:** Overtemperature protection, reverse polarity and locked-rotor protection, load dump protection, under-voltage detection
- **EMC requirements:** VDE 0879-2, interference suppression grade 5
- **Insulation class:** "B" in accordance with EN 60335-1
- **Type of protection:** Motor: IP 24 KM, Electronics: IP 66 / 69 K
- **Qualified to:** ISO 16750

Nominal data

Type	Motor	Curve	Nominal voltage VDC	Nominal voltage range VDC	Flow rate m³/h	speed/rpm rpm	Input power W	Current draw A	Sound pressure level dB(A)	Perm. amb. temp. °C	Mass kg	Electr. connection
K3G 097-AS24 -81[1]	M3G084-BF	A	26	16-32	1240	3730	390	15,0	70	-40..+85[2]	2,0	p. 47

subject to alterations

[1] 24-volt variant [2] over + 70 °C with power derating

Curves

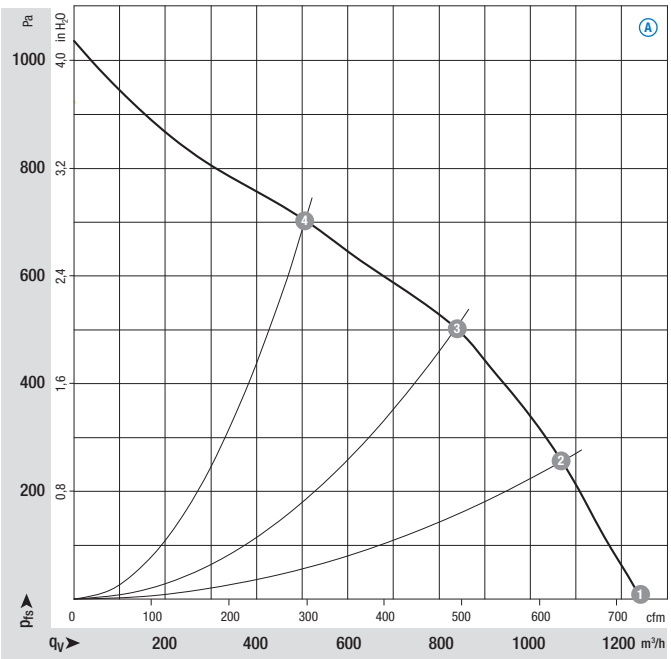

Air performance measured as per: ISO 5801, Installation category A, in ebm-papst scroll housing

Suction-side noise levels: L_pA measured at 1 m distance to fan axis

The acoustic values given are only valid under the measurment conditions listed and may vary depending on the installation situation.

With any deviation to the standard setup, the specific values have to be checked and reviewed once installed or fitted!

For detailed information see page 50 ff.

		n rpm	P_{ed} W	I A	L_pA dB(A)
A	1	3730	390	15,0	70
A	2	4125	363	13,9	69
A	3	4490	309	11,9	69
A	4	4985	245	9,4	70

ebmpapst

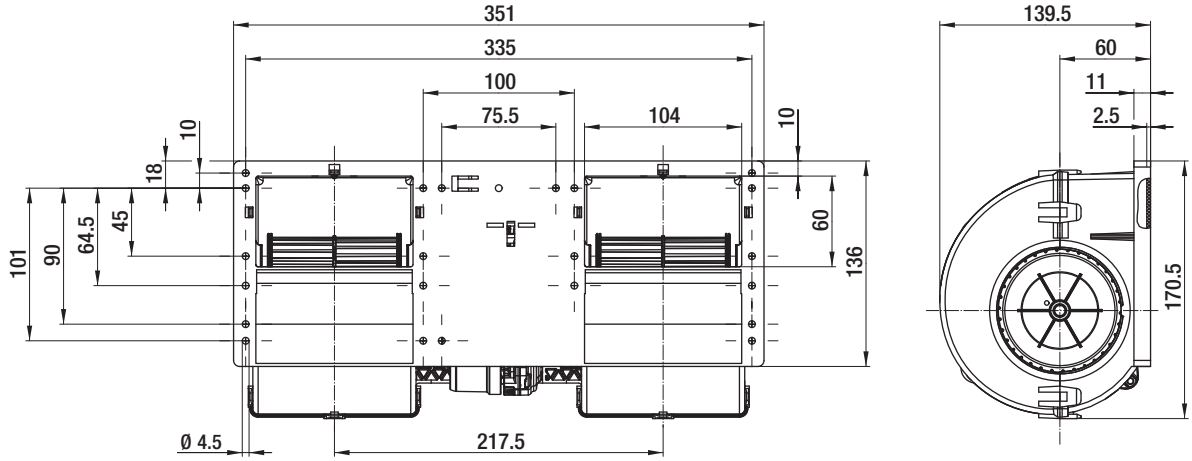

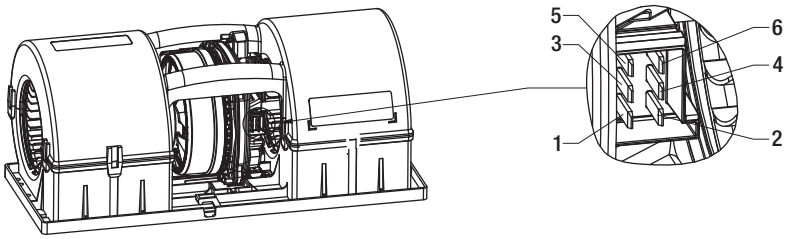

View connector plug

1	= + UB	black
2	= GND	brown
3	= PWM/LIN	yellow
4	= INVLIN	orange
5	= Lower	blue
6	= Diagnostic output	white

AMP Junior Power Timer, 6-pole, coded;
connection lead (460 mm) with mating plug
Part no. 02001-4-1021 (not included in delivery)

Electr. connection
p. 47

ErP2015 EXCEEDS THE NORM

EC dual centrifugal blowers

with brushless DC motor, Ø 097

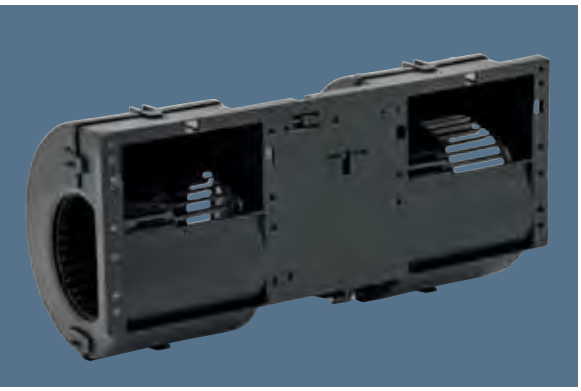

- **Material:** Housing: Grilon – coloured black, (conforms to UL 94 V0), Impeller: PA plastic, (conforms to UL 94 V0)
- **Connection:** Connection lead (450 mm), strands without silicone and halogen
- **Bearings:** Maintenance-free ball bearings on both sides
- **Motor protection:** Overtemperature protection, reverse polarity and locked-rotor protection, load dump protection, under-voltage detection
- **EMC requirements:** DIN EN 55025, ISO 7 637 part 3, DIN ISO 11 452, interference suppression grade 3
- **Insulation class:** "B" in accordance with EN 60335-1
- **Type of protection:** IP 24 KM
- **Evaluation in accordance with:** DIN 5510, part 2. Test in accordance with DIN 54837 Inflammability class: S4; Smoke development class: SR2; Drop-forming class: ST2; Flue gas toxicity FED (t_{perm}) = 0,17 < 1

Nominal data

Type	Motor	Curve	Nominal voltage VDC	Nominal voltage range VDC	Flow rate m³/h	speed/rpm rpm	Input power W	Current draw A	Sound pressure level dB(A)	Perm. amb. temp. °C	Mass kg	Electr. connection
K3G 097-AK68 -80[1]	M3G074-CF	A	26	16-32	1600	4800	740	28,5	75	-40..+60[2]	2,4	p. 46

subject to alterations

[1] 24-volt variant [2] short-term operation at up to 85 °C possible

Curves

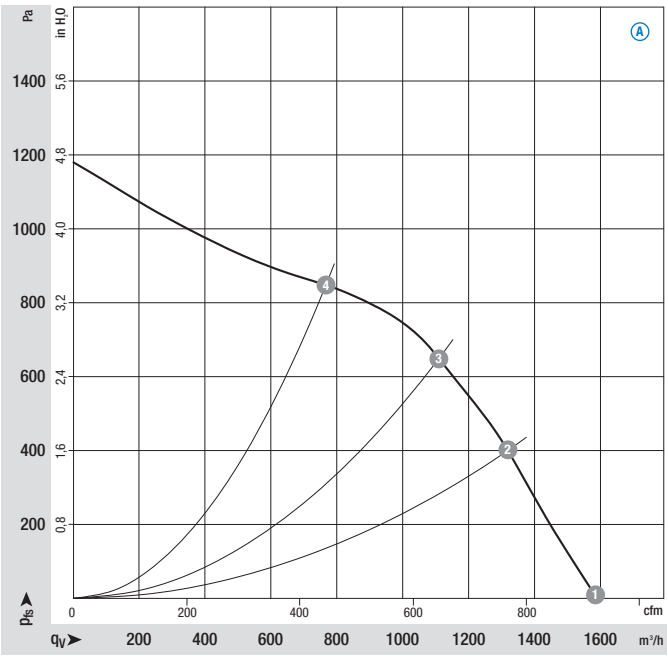

Air performance measured as per: ISO 5801, Installation category A, in ebm-papst scroll housing

Suction-side noise levels: L_pA measured at 1 m distance to fan axis

The acoustic values given are only valid under the measurment conditions listed and may vary depending on the installation situation.

With any deviation to the standard setup, the specific values have to be checked and reviewed once installed or fitted!

For detailed information see page 50 ff.

		n rpm	P_{ed} W	I A	L_pA dB(A)
A	1	4800	740	28,5	75
A	2	5135	652	25,0	74
A	3	5355	575	22,1	74
A	4	5640	446	17,2	74

ebmpapst

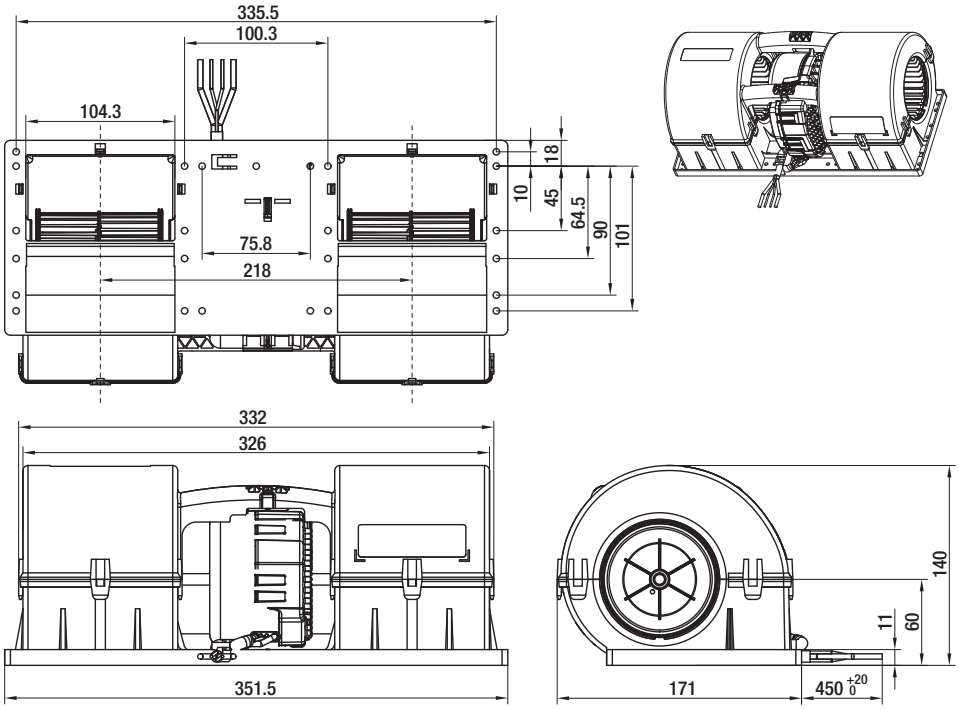

View lead connection

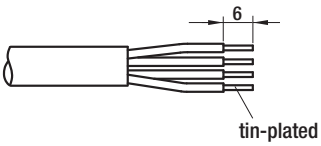

+UB	black
GND	brown
Diagnostic output	white
PWM/LIN	yellow

Electr. connection
p. 46

ErP2015 EXCEEDS THE NORM

EC axial fans

with brushless DC motor, Ø 300

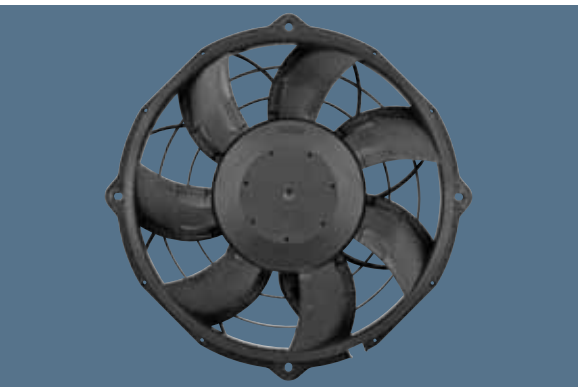

- **Material:** Wall ring: PA plastic, coloured black, conforms to EN 45545 (R25-HL3)
  Impeller: PA plastic, coloured black, conforms to EN 45545 (R25-HL3)
- **Direction of rotation:** Clockwise, seen on rotor
- **Direction of air flow:** "V", exhaust over struts
- **Type of protection:** Motor: IP 24 KM, Electronics: IP 66 / 69 K
- **Insulation class:** “B” in accordance with EN 60335-1
- **Mounting position:** Any
- **Mode of operation:** Continuous operation (S1)
- **Bearings:** Maintenance-free ball bearings
- **Motor protection:** Overtemperature protection, reverse polarity and locked-rotor protection, load dump protection, under-voltage detection
- **EMC requirements:** VDE 0879-2, interference suppression grade 5
- **Qualified to:** ISO 16750

Nominal data

Type	Motor	Curve	Nominal voltage	Nominal voltage range	Flow rate	speed/rpm	Input power	Current draw	Sound pressure level	Perm. amb. temp.	Mass	Electr. connection
			VDC	VDC	m³/h	rpm	W	A	dB(A)	°C	kg	
W3G300-BV24 -81[1]	M3G084-BF	A	26	16-32	2570	3160	205	7,90	74	-40..+110[2]	2,0	p. 47

subject to alterations

[1] 24-volt variant [2] over + 95 °C with power derating

Curves

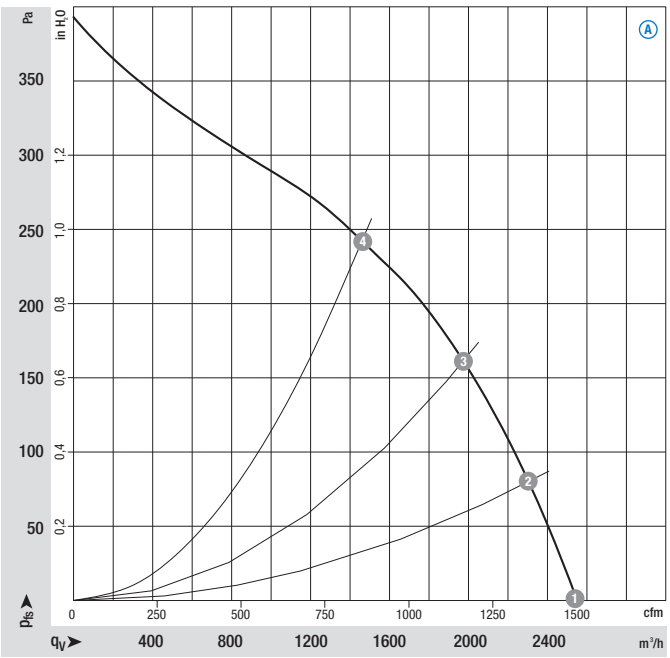

Air performance measured as per: ISO 5801, Installation category A, without protection against accidental contact

Suction-side noise levels: L_pA measured at 1 m distance to fan axis

The acoustic values given are only valid under the measurment conditions listed and may vary depending on the installation situation.

With any deviation to the standard setup, the specific values have to be checked and reviewed once installed or fitted!

For detailed information see page 50 ff.

		n rpm	P_{ed} W	I A	L_pA dB(A)
A	1	3160	205	7,90	74
A	2	3150	216	8,30	73
A	3	3085	240	9,20	73
A	4	2965	244	9,40	73

ebmpapst

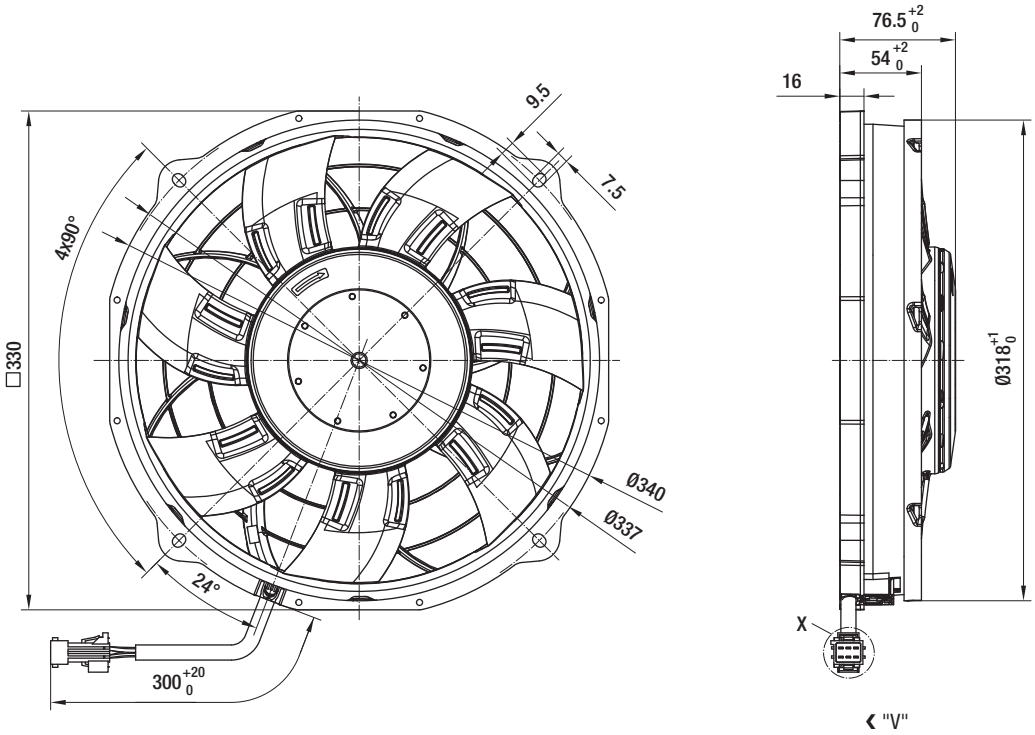

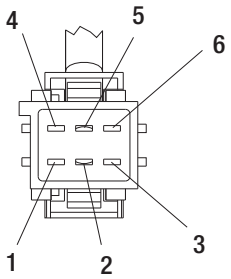

View X

1 =	+ UB	black
2 =	GND	brown
3 =	PWM/LIN*	yellow
4 =	INVLIN	orange
5 =	Lower	blue
6 =	Diagnostic output	white

AMP Junior Power Timer, 6-pole, coded;
connection lead (460 mm) with mating plug
Part no. 02002-4-1021 (not included in delivery)

* optionally LIN-BUS

Electr. connection
p. 47

ErP2015 EXCEEDS THE NORM

EC axial fans

with brushless DC motor, Ø 385

- **Material:** Wall ring: PA plastic, coloured black, conforms to EN 45545 (R25-HL3)
  Impeller: PA plastic, coloured black, conforms to EN 45545 (R25-HL3)
- **Direction of rotation:** Clockwise, seen on rotor
- **Direction of air flow:** "V", exhaust over struts
- **Type of protection:** Motor: IP 24 KM, Electronics: IP 66 / 69 K
- **Insulation class:** “B” in accordance with EN 60335-1
- **Mounting position:** Any
- **Mode of operation:** Continuous operation (S1)
- **Bearings:** Maintenance-free ball bearings
- **Motor protection:** Overtemperature protection, reverse polarity and locked-rotor protection, load dump protection, under-voltage detection
- **EMC requirements:** VDE 0879-2, interference suppression grade 5
- **Qualified to:** ISO 16750

Nominal data

Type	Motor	Curve	Nominal voltage	Nominal voltage range	Flow rate	speed/rpm	Input power	Current draw	Sound pressure level	Perm. amb. temp.	Mass	Electr. connection
			VDC	VDC	m³/h	rpm	W	A	dB(A)	°C	kg	
W3G385-CT65 -81[1]	M3G084-CF	A	26	16-32	4220	3250	565	21,7	80	-40..+110[2]	3,1	p. 48

subject to alterations

[1] 24-volt variant [2] over + 70 °C with power derating

Curves

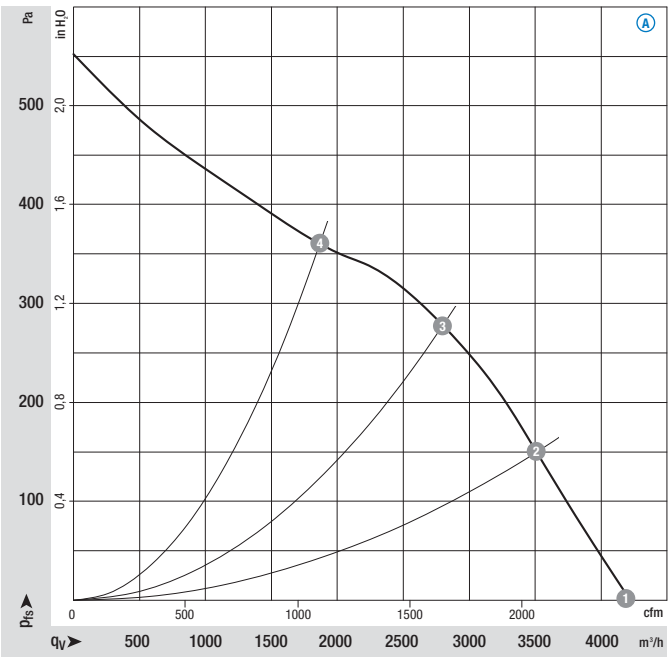

Air performance measured as per: ISO 5801, Installation category A, without protection against accidental contact

Suction-side noise levels: L_pA measured at 1 m distance to fan axis

The acoustic values given are only valid under the measurment conditions listed and may vary depending on the installation situation.

With any deviation to the standard setup, the specific values have to be checked and reviewed once installed or fitted!

For detailed information see page 50 ff.

		n rpm	P_e W	I A	L_pA dB(A)
A	1	3250	565	21,7	80
A	2	3140	595	22,9	79
A	3	2985	620	23,8	77
A	4	2840	620	23,8	76

ebmpapst

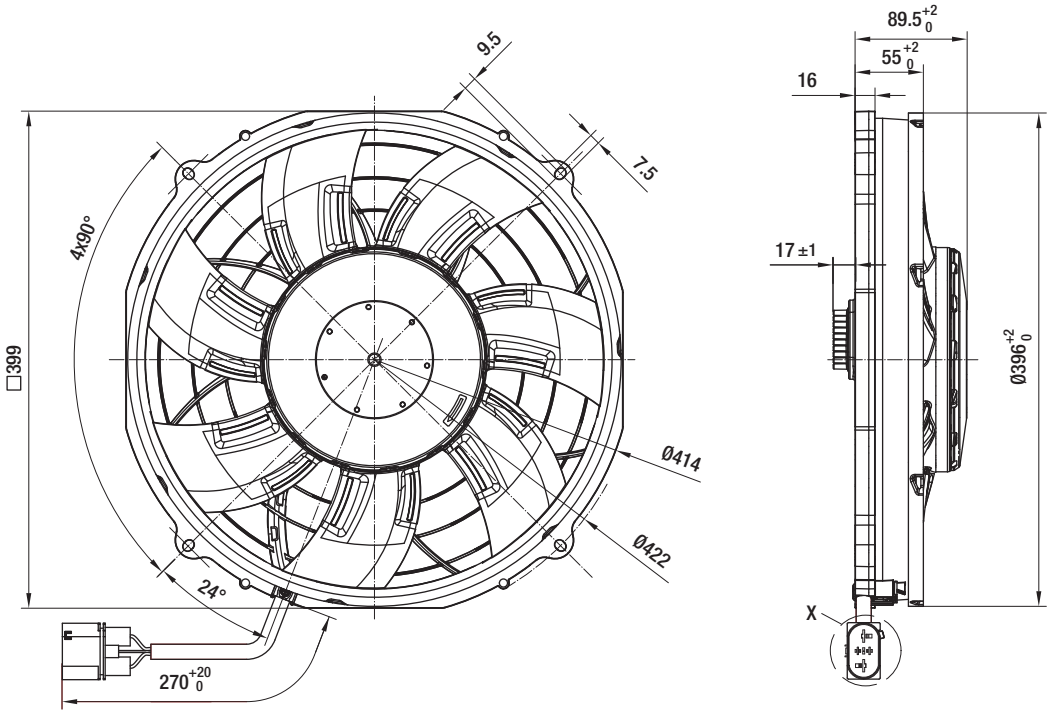

‹ "V"

Bushing on customer side:

Housing:		FCI 30432101
Pins:	9,5 mm	FCI 60070461
	4,8 mm	FCI 60040431
Sealings:		FCI 60993301
		FCI 60992607

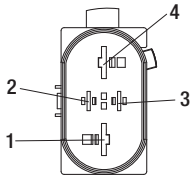

View X

1 =	+ UB	black
2 =	Diagnostic output*	white
3 =	PWM/LIN	yellow
4 =	GND	brown

* optionally LIN-BUS

Electr. connection
p. 48

ErP2015 EXCEEDS THE NORM

EC centrifugal fans RadiCal

backward curved, Ø 280

- **Material:** Impeller: PA plastic, coloured black, conforms to EN 45545 (R25-HL3)
  Rotor: Coated in black
  Electronics housing: Die-cast aluminium
- **Direction of rotation:** Clockwise, seen on rotor
- **Type of protection:** Motor: IP 24 KM, Electronics: IP 66 / 69 K
- **Insulation class:** “B” in accordance with EN 60335-1
- **Mounting position:** Any
- **Mode of operation:** Continuous operation (S1)
- **Bearings:** Maintenance-free ball bearings
- **Motor protection:** Overtemperature protection, reverse polarity and locked-rotor protection, load dump protection, under-voltage detection
- **EMC requirements:** VDE 0879-2, interference suppression grade 5
- **Qualified to:** ISO 16750

Nominal data

Type	Motor	Curve	Nominal voltage	Nominal voltage range	Flow rate	speed/rpm	Input power	Current draw	Sound pressure level	Perm. amb. temp.	Mass	Electr. connection
			VDC	VDC	m³/h	rpm	W	A	dB(A)	°C	kg	
R3G 280-RU26 -81[1]	M3G084-CF	A	26	16-32	2750	2350	252	10,5	72	-40..+60	2,8	p. 47

subject to alterations

[1] 24-volt variant

Curves

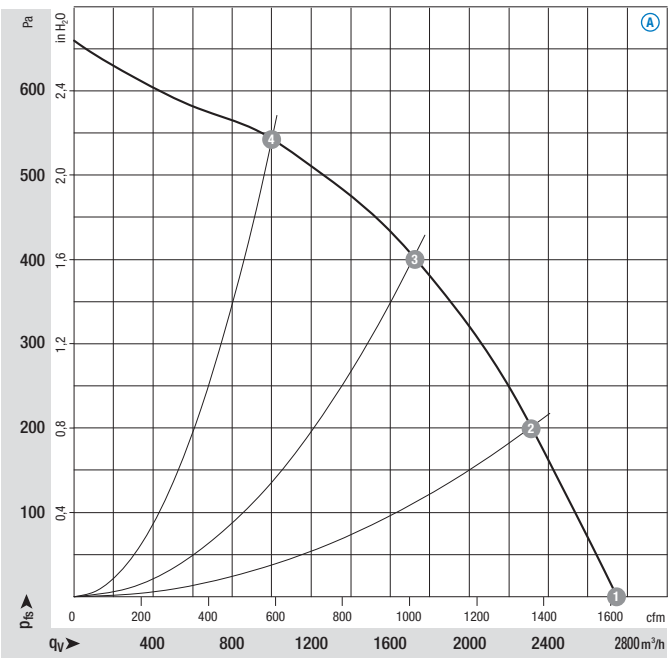

Air performance measured as per: ISO 5801, Installation category A, in ebm-papst full nozzle and without protection against accidental contact

Suction-side noise levels: L_pA measured at 1 m distance to fan axis

The acoustic values given are only valid under the measurment conditions listed and may vary depending on the installation situation.

With any deviation to the standard setup, the specific values have to be checked and reviewed once installed or fitted!

For detailed information see page 50 ff.

		n rpm	P_{ed} W	I A	L_pA dB(A)
A	1	2350	252	10,5	72
A	2	2300	300	12,5	68
A	3	2265	328	13,7	68
A	4	2315	298	12,4	69

ebmpapst

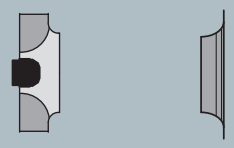

Type	Inlet nozzle
R3G 280-RU26 -81	28000-2-4013

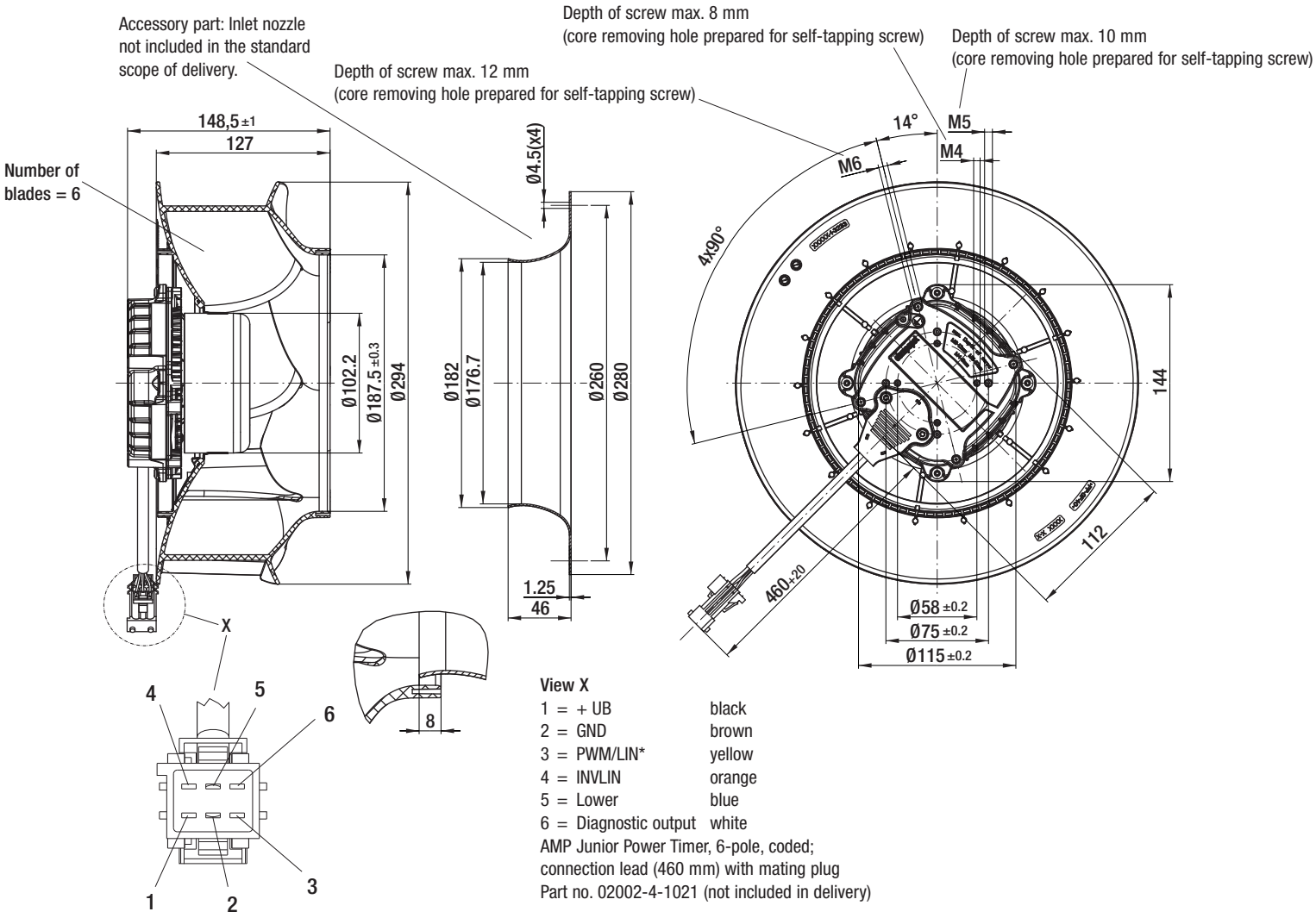

View X

1 =	+ UB	black
2 =	GND	brown
3 =	PWM/LIN*	yellow
4 =	INVLIN	orange
5 =	Lower	blue
6 =	Diagnostic output	white

AMP Junior Power Timer, 6-pole, coded;
connection lead (460 mm) with mating plug
Part no. 02002-4-1021 (not included in delivery)

* optionally LIN-BUS

Electr. connection
p. 47

Tractionised fans for railway applications - 110 VDC

ErP2015 EXCEEDS THE NORM

EC centrifugal fans RadiCal

backward curved, Ø 190

- **Material:** Impeller: PA plastic
  Rotor: Galvanised
  Electronics housing: Die-cast aluminium
- **Number of blades:** 7
- **Direction of rotation:** Clockwise, seen on rotor
- **Type of protection:** IP 44
- **Insulation class:** "B"
- **Mounting position:** Shaft horizontal or Rotor on top, rotor on bottom on request
- **Conensate discharges:** None
- **Mode of operation:** Continuous operation (S1)
- **Bearings:** Maintenance-free ball bearings

Nominal data

Type	Motor	Curve	Nominal voltage	Nominal voltage range	Flow rate	speed/rpm (1)	Max. Input power (1)	Max. Current draw (1)	Sound pressure level (1)	Perm. amb. temp.	Mass	Electr. connection
			VDC	VDC	m³/h	rpm	W	A	dB(A)	°C	kg	
R3G 190-RV00 -01 (2)	M3G074-BF	A	110	77-145	545	3880	145	1,32	63	-40..+60	1,8	p. 49

subject to alterations

(1) Nominal data in operating point with maximum load and 110 VDC (2) Availability scheduled for second quarter 2013

Curves

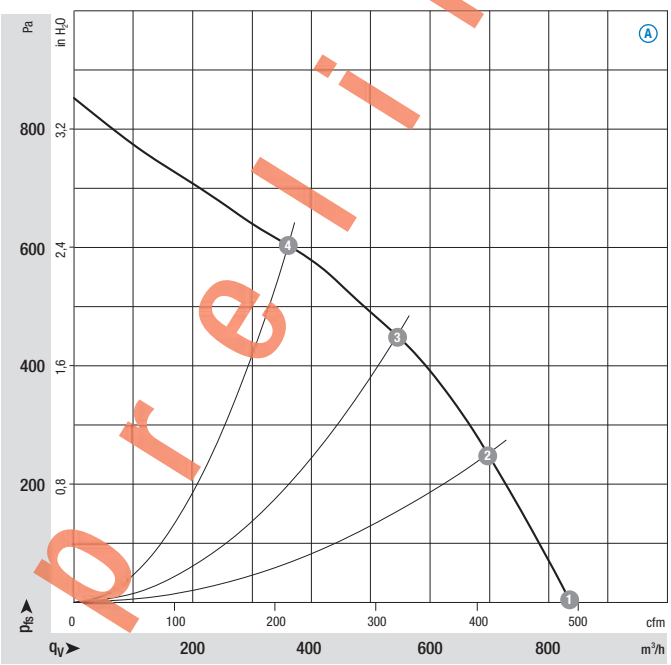

Air performance measured as per: ISO 5801, Installation category A, in ebm-papst full nozzle and without protection against accidental contact

Suction-side noise levels: L_pA measured at 1 m distance to fan axis

The acoustic values given are only valid under the measurment conditions listed and may vary depending on the installation situation.

With any deviation to the standard setup, the specific values have to be checked and reviewed once installed or fitted!

For detailed information see page 50 ff.

		n rpm	P_{ed} W	I A	L_pA dB(A)
A	1	4005	123	1,12	72
A	2	3915	138	1,25	66
A	3	3880	145	1,32	63
A	4	3925	139	1,26	66

ebmpapst

- **Technical features:**
  - Collective fault signal floating contact
  - Electronics / motor overtemperature protection
  - Motor current limitation
  - Locked-rotor protection
  - Soft start
- **Cable exit:** Variable
- **Electrical connection:** p. 49
- **Product conforming to standards:** as per list on page 2

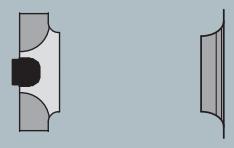

Type	Inlet nozzle
R3G 190-RV00 -01	09576-2-4013

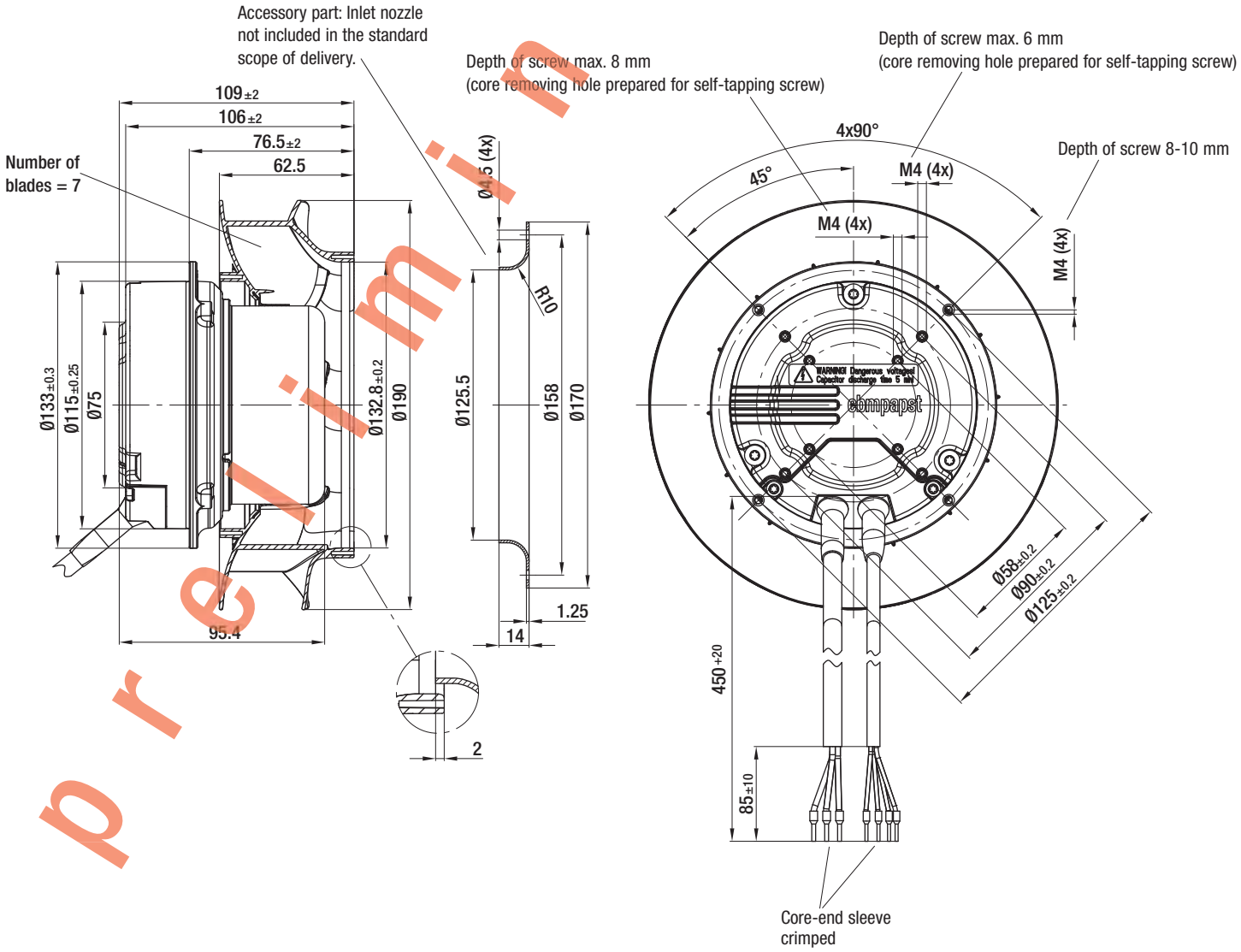

Electr. connection p. 49

ErP2015 EXCEEDS THE NORM

EC centrifugal fans RadiCal

backward curved, Ø 220

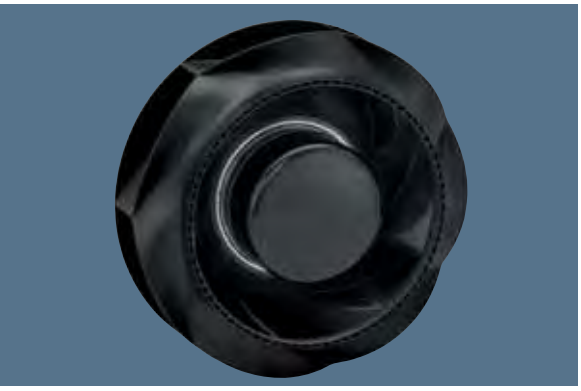

- **Material:** Impeller: PA plastic
  Rotor: Galvanised
  Electronics housing: Die-cast aluminium
- **Number of blades:** 7
- **Direction of rotation:** Clockwise, seen on rotor
- **Type of protection:** IP 44
- **Insulation class:** "B"
- **Mounting position:** Shaft horizontal or Rotor on top, rotor on bottom on request
- **Conensate discharges:** None
- **Mode of operation:** Continuous operation (S1)
- **Bearings:** Maintenance-free ball bearings

Nominal data

Type	Motor	Curve	Nominal voltage	Nominal voltage range	Flow rate	speed/rpm (1)	Max. Input power (1)	Max: Current draw (1)	Sound pressure level (1)	Perm. amb. temp.	Mass	Electr. connection
			VDC	VDC	m³/h	rpm	W	A	dB(A)	°C	kg	
R3G 220-RV00 -01 (2)	M3G074-CF	A	110	77-145	720	3225	165	1,50	65	-40..+60	2,0	p. 49

subject to alterations

(1) Nominal data in operating point with maximum load and 110 VDC (2) Availability scheduled for second quarter 2013

Curves

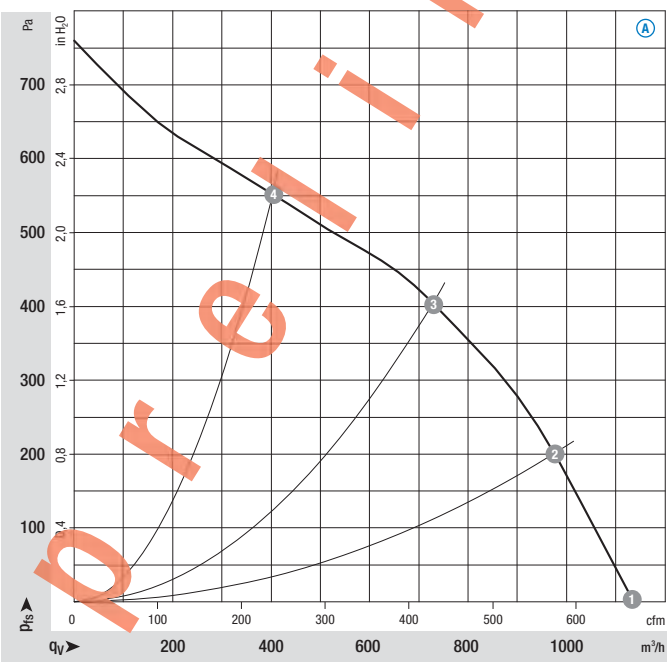

Air performance measured as per: ISO 5801, Installation category A, in ebm-papst full nozzle and without protection against accidental contact

Suction-side noise levels: L_pA measured at 1 m distance to fan axis

The acoustic values given are only valid under the measurment conditions listed and may vary depending on the installation situation.

With any deviation to the standard setup, the specific values have to be checked and reviewed once installed or fitted!

For detailed information see page 50 ff.

		n rpm	P_{ed} W	I A	L_pA dB(A)
A	1	3305	147	1,33	70
A	2	3275	157	1,43	68
A	3	3225	165	1,50	65
A	4	3295	160	1,45	68

ebmpapst

- **Technical features:**
  - Collective fault signal floating contact
  - Electronics / motor overtemperature protection
  - Motor current limitation
  - Locked-rotor protection
  - Soft start
- **Cable exit:** Variable
- **Electrical connection:** p. 49
- **Product conforming to standards:** as per list on page 2

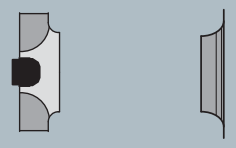

Type	Inlet nozzle
R3G 220-RV00 -01	09609-2-4013

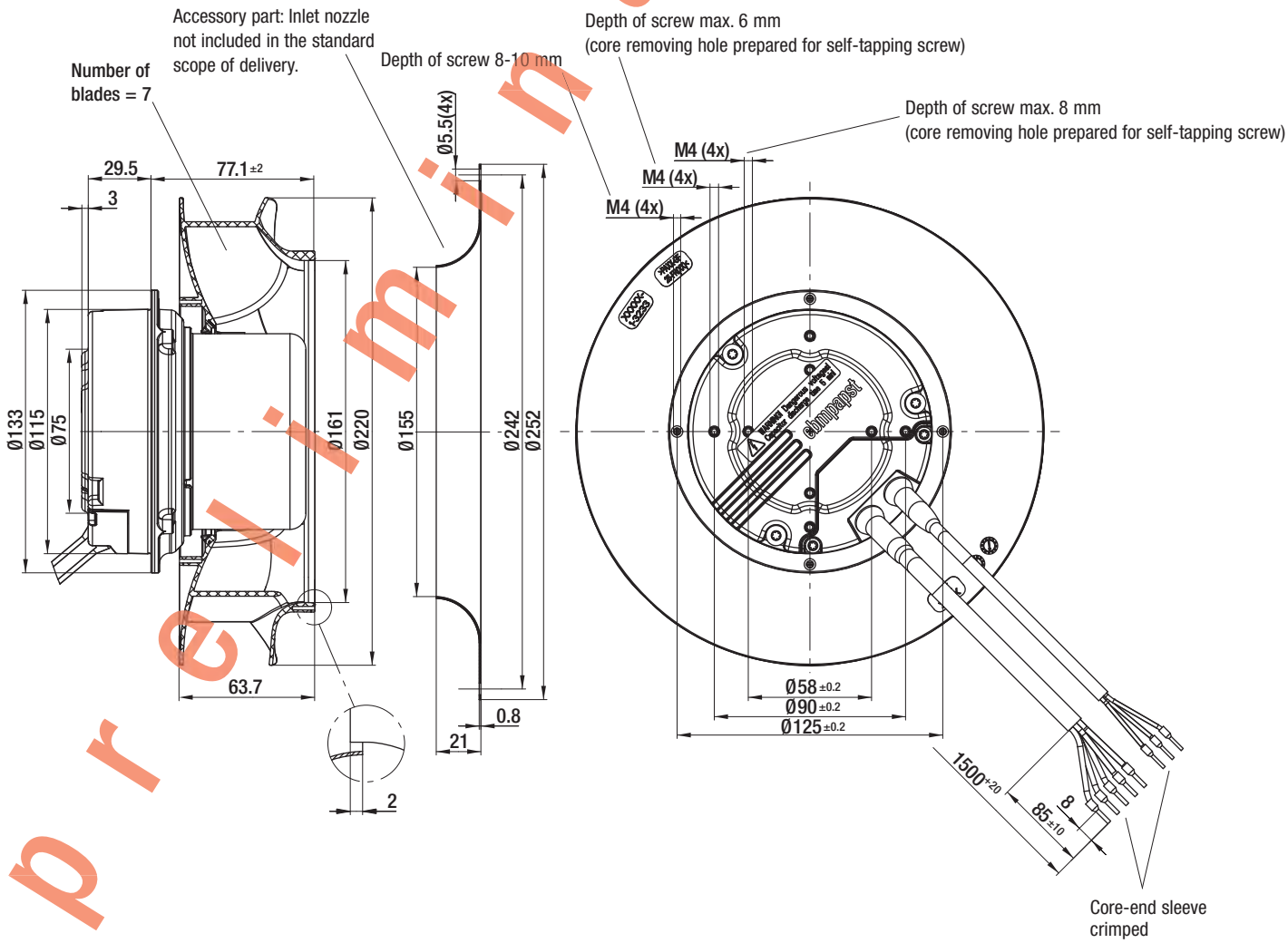

Electr. connection p. 49

ErP2015 EXCEEDS THE NORM

EC centrifugal fans RadiCal

backward curved, Ø 250

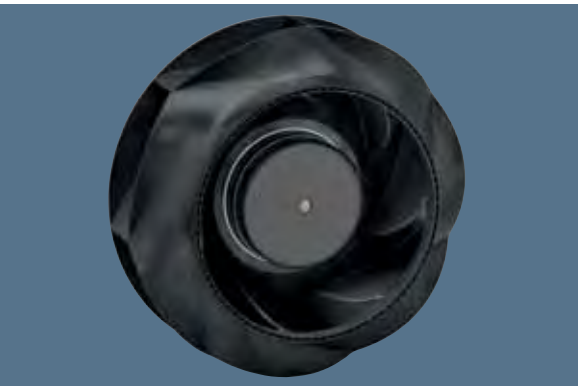

- **Material:** Impeller: PA plastic
  Rotor: Galvanised
  Electronics housing: Die-cast aluminium
- **Number of blades:** 7
- **Direction of rotation:** Clockwise, seen on rotor
- **Type of protection:** IP 44
- **Insulation class:** "B"
- **Mounting position:** Shaft horizontal or Rotor on top, rotor on bottom on request
- **Conensate discharges:** None
- **Mode of operation:** Continuous operation (S1)
- **Bearings:** Maintenance-free ball bearings

Nominal data

Type	Motor	Curve	Nominal voltage	Nominal voltage range	Flow rate	speed/rpm (1)	Max. Input power (1)	Max: Current draw (1)	Sound pressure level (1)	Perm. amb. temp.	Mass	Electr. connection
			VDC	VDC	m³/h	rpm	W	A	dB(A)	°C	kg	
R3G 250-RV00 -01 (2)	M3G074-CF	A	110	77-145	900	2515	163	1,48	60	-40..+60	2,4	p. 49

subject to alterations

(1) Nominal data in operating point with maximum load and 110 VDC (2) Availability scheduled for second quarter 2013

Curves

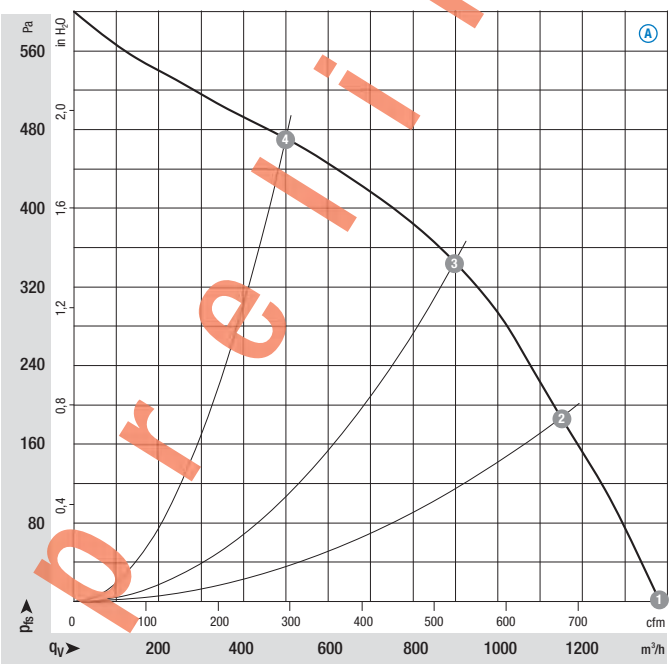

Air performance measured as per: ISO 5801, Installation category A, in ebm-papst full nozzle and without protection against accidental contact

Suction-side noise levels: L_pA measured at 1 m distance to fan axis

The acoustic values given are only valid under the measurment conditions listed and may vary depending on the installation situation.

With any deviation to the standard setup, the specific values have to be checked and reviewed once installed or fitted!

For detailed information see page 50 ff.

		n rpm	P_{ed} W	I A	L_pA dB(A)
A	1	2530	132	1,20	67
A	2	2495	155	1,41	63
A	3	2515	163	1,48	60
A	4	2525	149	1,35	65

ebmpapst

- **Technical features:**
  - Collective fault signal floating contact
  - Electronics / motor overtemperature protection
  - Motor current limitation
  - Locked-rotor protection
  - Soft start
- **Cable exit:** Variable
- **Electrical connection:** p. 49
- **Product conforming to standards:** as per list on page 2

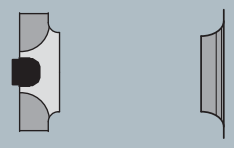

Type	Inlet nozzle
R3G 250-RV00 -01	96359-2-4013

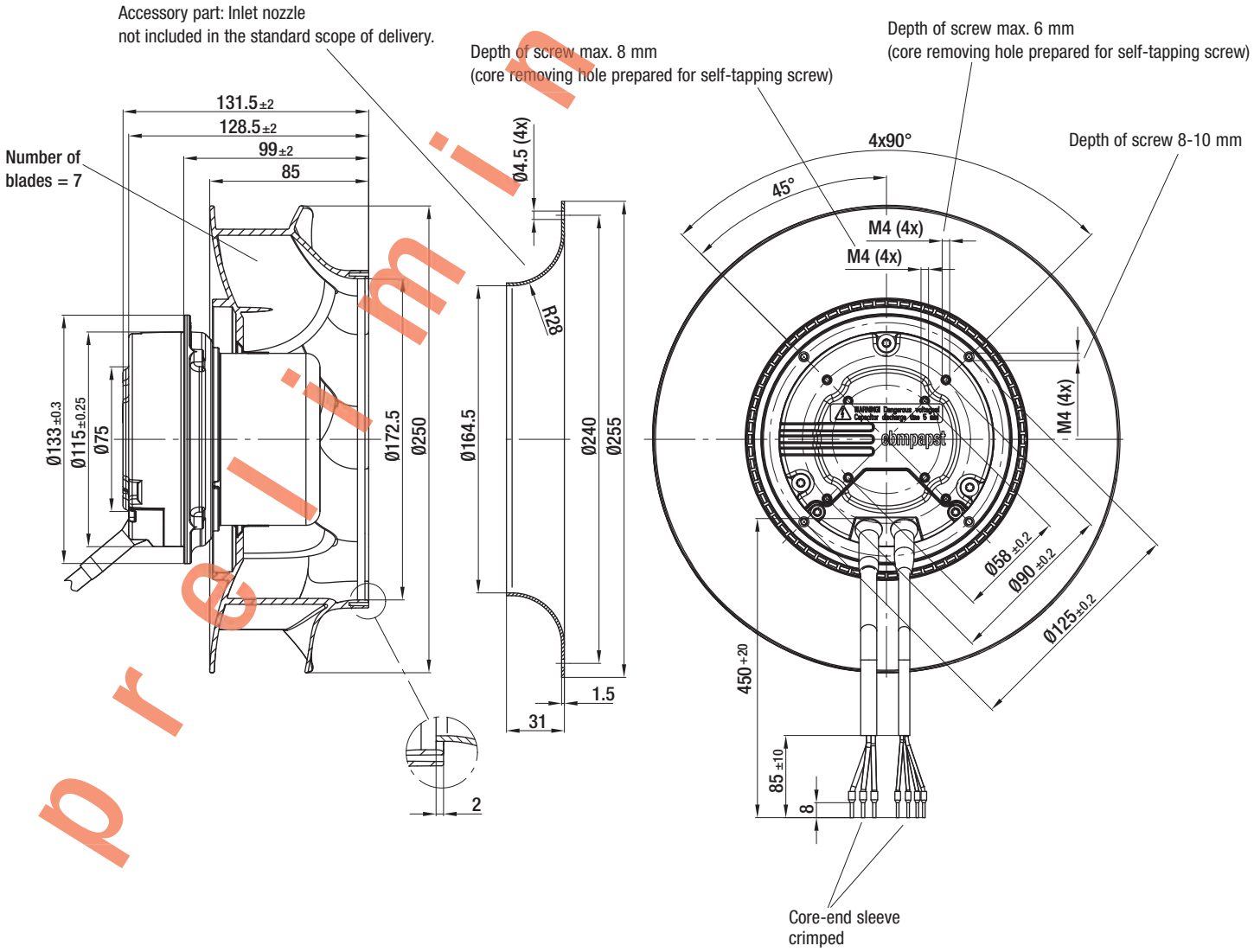

Electr. connection
p. 49

ErP2015 EXCEEDS THE NORM

EC centrifugal fans RadiCal

backward curved, Ø 250

- **Material:** Impeller: PA plastic
  Rotor: Coated in black
  Electronics housing: Die-cast aluminium
- **Number of blades:** 7
- **Direction of rotation:** Clockwise, seen on rotor
- **Type of protection:** IP 54
- **Insulation class:** "B"
- **Mounting position:** Shaft horizontal or Rotor on top, rotor on bottom on request
- **Conensate discharges:** None
- **Mode of operation:** Continuous operation (S1)
- **Bearings:** Maintenance-free ball bearings

Nominal data

Type	Motor	Curve	Nominal voltage	Nominal voltage range	Flow rate	speed/rpm (1)	Max. Input power (1)	Max. Current draw (1)	Sound pressure level (1)	Perm. amb. temp.	Mass	Electr. connection
			VDC	VDC	m³/h	rpm	W	A	dB(A)	°C	kg	
R3G 250-R000 -91 (2)	M3G084-DF	A	110	77-145	1040	3100	290	2,64	66	-40..+60	4,1	p. 49

subject to alterations

(1) Nominal data in operating point with maximum load and 110 VDC (2) Availability scheduled for second quarter 2013

Curves

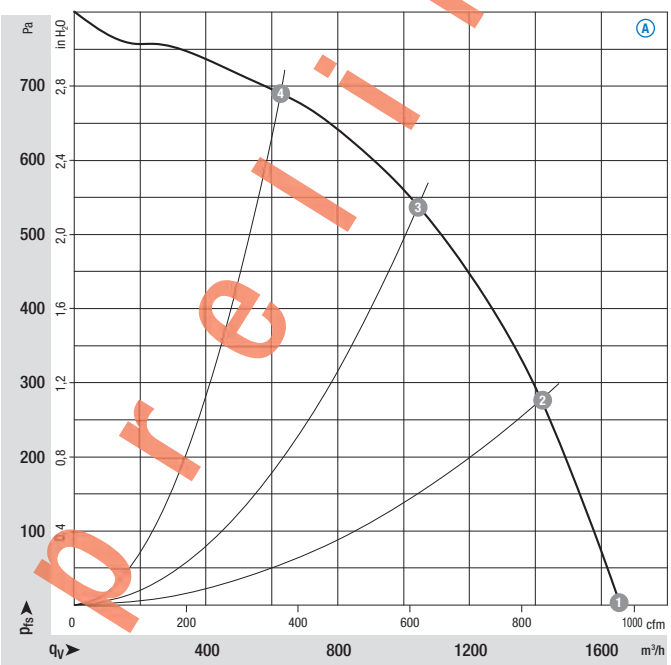

Air performance measured as per: ISO 5801, Installation category A, in ebm-papst full nozzle and without protection against accidental contact

Suction-side noise levels: L_pA measured at 1 m distance to fan axis

The acoustic values given are only valid under the measurment conditions listed and may vary depending on the installation situation.

With any deviation to the standard setup, the specific values have to be checked and reviewed once installed or fitted!

For detailed information see page 50 ff.

		n rpm	P_{ed} W	I A	L_pA dB(A)
A	1	3100	235	2,15	72
A	2	3100	275	2,50	69
A	3	3100	290	2,64	66
A	4	3100	255	2,30	69

ebmpapst

- **Technical features:**
  - Collective fault signal floating contact
  - Electronics / motor overtemperature protection
  - Motor current limitation
  - Locked-rotor protection
  - Soft start
- **Cable exit:** Variable
- **Electrical connection:** p. 49
- **Product conforming to standards:** as per list on page 2

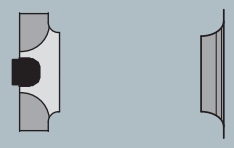

Type	Inlet nozzle
R3G 250-R000 -91	96359-2-4013

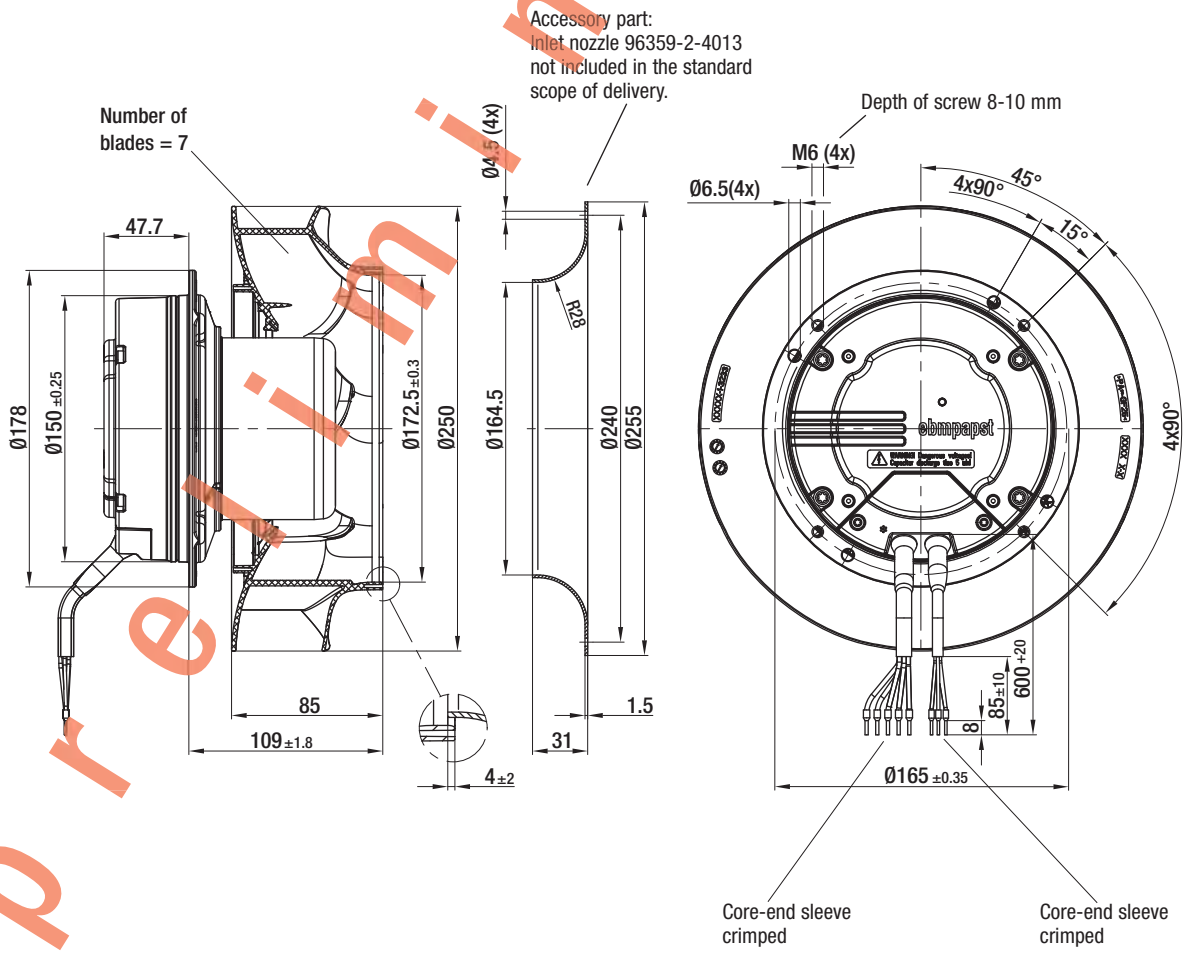

Electr. connection
p. 49

ErP2015 EXCEEDS THE NORM

EC centrifugal fans RadiCal

backward curved, Ø 280

- **Material:** Impeller: PA plastic
  Rotor: Galvanised
  Electronics housing: Die-cast aluminium
- **Number of blades:** 6
- **Direction of rotation:** Clockwise, seen on rotor
- **Type of protection:** IP 44
- **Insulation class:** "B"
- **Mounting position:** Shaft horizontal or Rotor on top, rotor on bottom on request
- **Conensate discharges:** None
- **Mode of operation:** Continuous operation (S1)
- **Bearings:** Maintenance-free ball bearings

Nominal data

Type	Motor	Curve	Nominal voltage	Nominal voltage range	Flow rate	speed/rpm (1)	Max. Input power (1)	Max: Current draw (1)	Sound pressure level (1)	Perm. amb. temp.	Mass	Electr. connection
			VDC	VDC	m³/h	rpm	W	A	dB(A)	°C	kg	
R3G 280-RV00 -01 (2)	M3G074-CF	A	110	77-145	1970	1910	168	1,53	62	-40..+60	2,7	p. 49

subject to alterations

(1) Nominal data in operating point with maximum load and 110 VDC (2) Availability scheduled for second quarter 2013

Curves

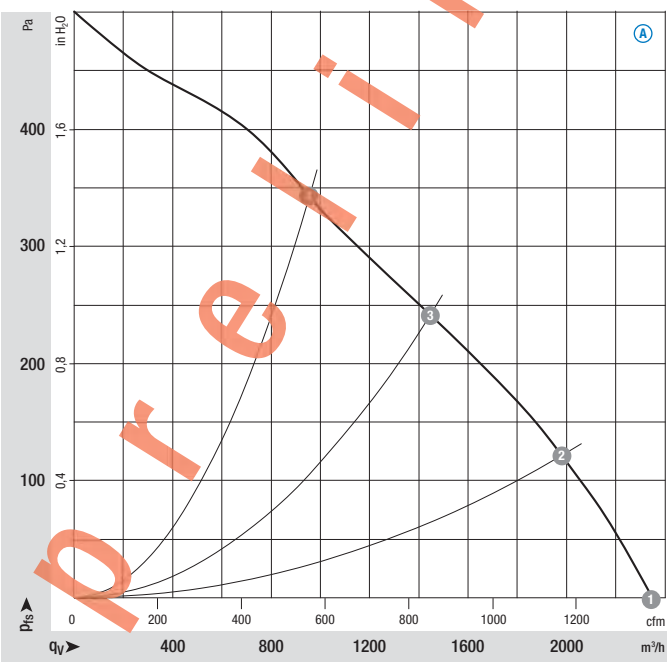

Air performance measured as per: ISO 5801, Installation category A, in ebm-papst full nozzle and without protection against accidental contact

Suction-side noise levels: L_pA measured at 1 m distance to fan axis

The acoustic values given are only valid under the measurment conditions listed and may vary depending on the installation situation.

With any deviation to the standard setup, the specific values have to be checked and reviewed once installed or fitted!

For detailed information see page 50 ff.

		n rpm	P_{ed} W	I A	L_pA dB(A)
A	1	1980	152	1,38	67
A	2	1910	168	1,53	62
A	3	1775	165	1,50	56
A	4	1840	165	1,50	56

ebmpapst

- **Technical features:**
  - Collective fault signal floating contact
  - Electronics / motor overtemperature protection
  - Motor current limitation
  - Locked-rotor protection
  - Soft start
- **Cable exit:** Variable
- **Electrical connection:** p. 49
- **Product conforming to standards:** as per list on page 2

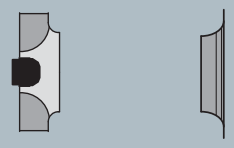

Type	Inlet nozzle
R3G 280-RV00 -01	28000-2-4013

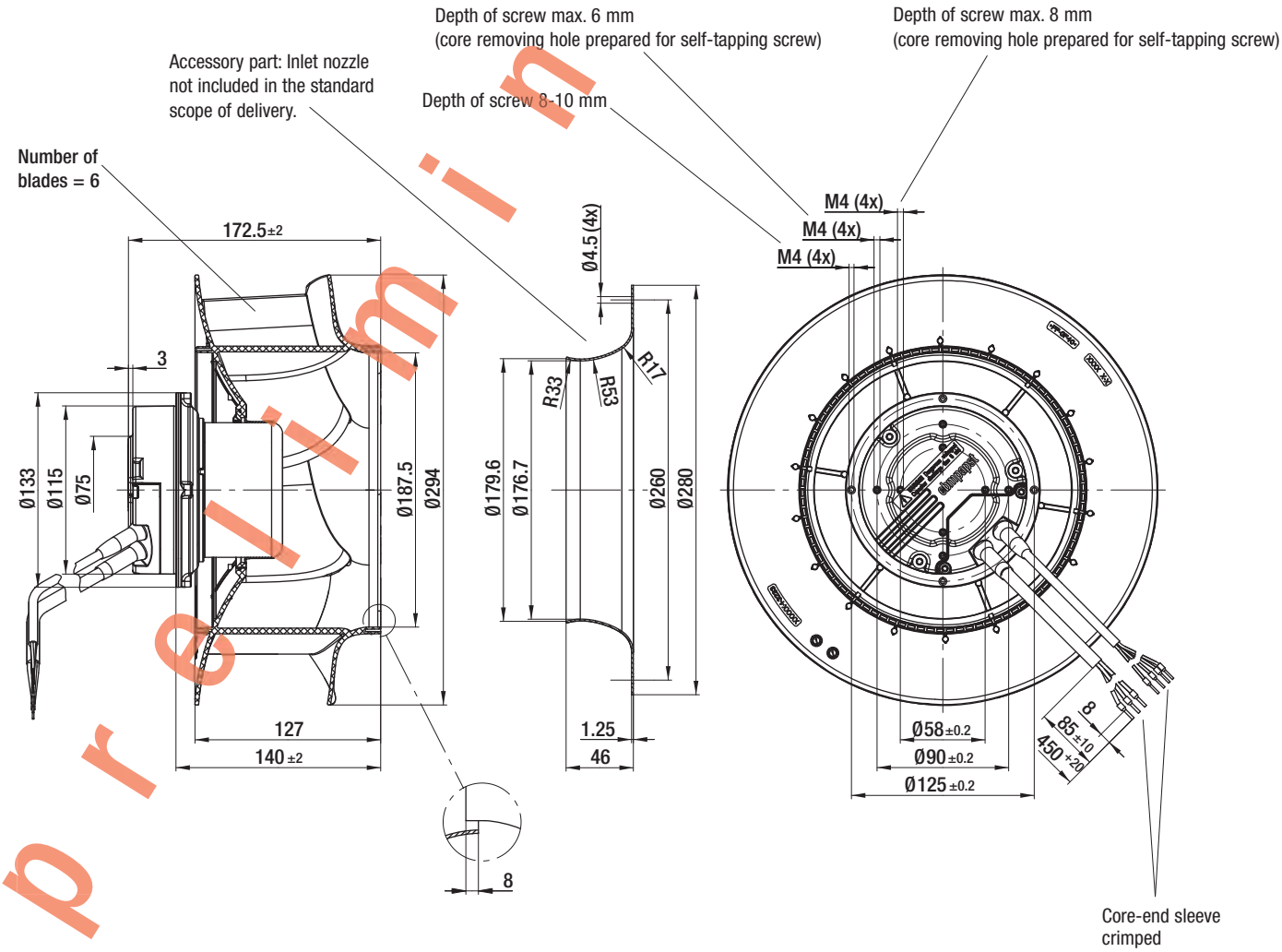

Electr. connection
p. 49

ErP2015 EXCEEDS THE NORM

EC centrifugal fans RadiCal

backward curved, Ø 280

- **Material:** Impeller: PA plastic
  Rotor: Coated in black
  Electronics housing: Die-cast aluminium
- **Number of blades:** 6
- **Direction of rotation:** Clockwise, seen on rotor
- **Type of protection:** IP 54
- **Insulation class:** "B"
- **Mounting position:** Shaft horizontal or Rotor on top, rotor on bottom on request
- **Conensate discharges:** None
- **Mode of operation:** Continuous operation (S1)
- **Bearings:** Maintenance-free ball bearings

Nominal data

Type	Motor	Curve	Nominal voltage	Nominal voltage range	Flow rate	speed/rpm (1)	Max. Input power (1)	Max: Current draw (1)	Sound pressure level (1)	Perm. amb. temp.	Mass	Electr. connection
			VDC	VDC	m³/h	rpm	W	A	dB(A)	°C	kg	
R3G 280-R000 -91 (2)	M3G084-DF	A	110	77-145	1490	2100	255	2,30	59	-40..+60	4,0	p. 49

subject to alterations

(1) Nominal data in operating point with maximum load and 110 VDC (2) Availability scheduled for second quarter 2013

Curves

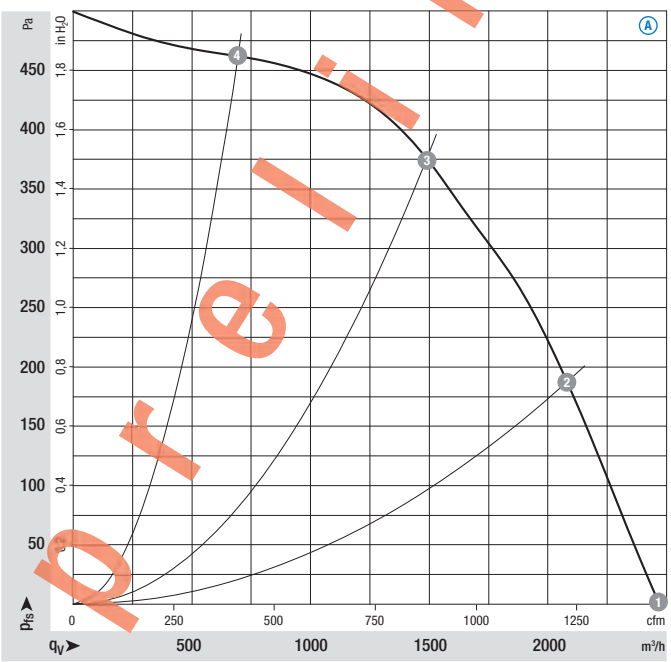

Air performance measured as per: ISO 5801, Installation category A, in ebm-papst full nozzle and without protection against accidental contact

Suction-side noise levels: L_pA measured at 1 m distance to fan axis

The acoustic values given are only valid under the measurment conditions listed and may vary depending on the installation situation.

With any deviation to the standard setup, the specific values have to be checked and reviewed once installed or fitted!

For detailed information see page 50 ff.

		n rpm	P_{ed} W	I A	L_pA dB(A)
A	1	2100	190	1,75	69
A	2	2100	240	2,20	64
A	3	2100	255	2,30	59
A	4	2100	200	1,80	61

ebmpapst

- **Technical features:**
  - Collective fault signal floating contact
  - Electronics / motor overtemperature protection
  - Motor current limitation
  - Locked-rotor protection
  - Soft start
- **Cable exit:** Variable
- **Electrical connection:** p. 49
- **Product conforming to standards:** as per list on page 2

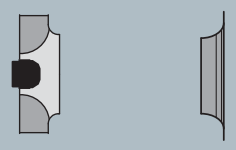

Type	Inlet nozzle
R3G 280-R000 -91	28000-2-4013

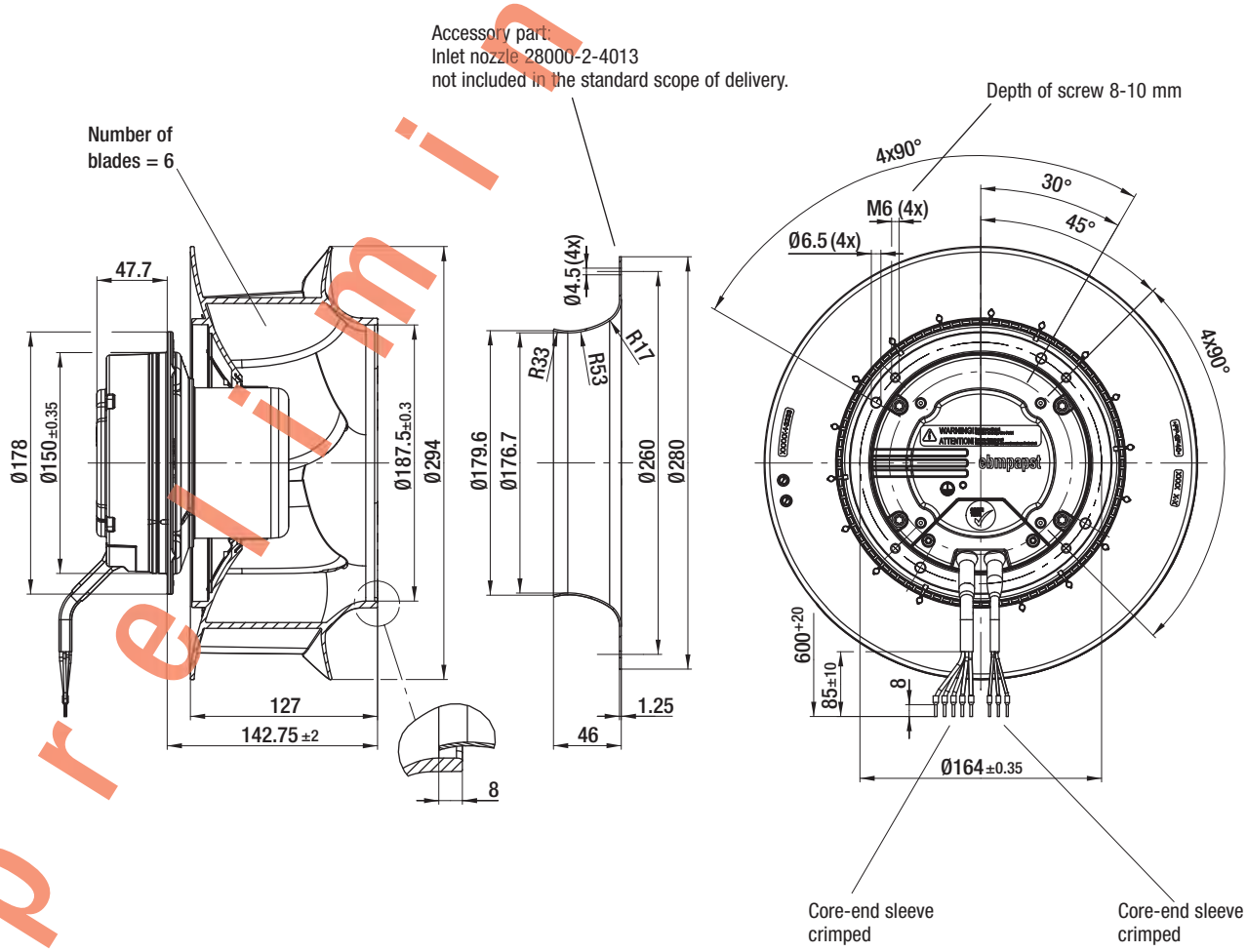

Electr. connection
p. 49

ErP2015 EXCEEDS THE NORM

EC centrifugal fans RadiCal

backward curved, Ø 310

- **Material:** Impeller: PA plastic
  Rotor: Galvanised
  Electronics housing: Die-cast aluminium
- **Number of blades:** 6
- **Direction of rotation:** Clockwise, seen on rotor
- **Type of protection:** IP 44
- **Insulation class:** "B"
- **Mounting position:** Shaft horizontal or Rotor on top, rotor on bottom on request
- **Conensate discharges:** None
- **Mode of operation:** Continuous operation (S1)
- **Bearings:** Maintenance-free ball bearings

Nominal data

Type	Motor	Curve	Nominal voltage	Nominal voltage range	Flow rate	speed/rpm (1)	Max. Input power (1)	Max: Current draw (1)	Sound pressure level (1)	Perm. amb. temp.	Mass	Electr. connection
			VDC	VDC	m³/h	rpm	W	A	dB(A)	°C	kg	
R3G 310-RV00 -01 (2)	M3G074-CF	A	110	77-145	1445	1525	150	1,36	52	-25..+60	3,0	p. 49

subject to alterations

(1) Nominal data in operating point with maximum load and 110 VDC (2) Availability scheduled for second quarter 2013

Curves

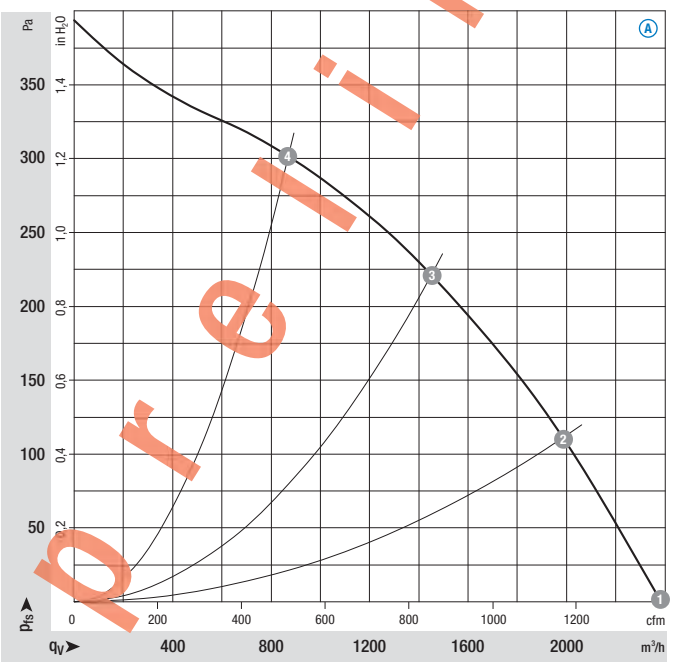

Air performance measured as per: ISO 5801, Installation category A, in ebm-papst full nozzle and without protection against accidental contact

Suction-side noise levels: L_pA measured at 1 m distance to fan axis

The acoustic values given are only valid under the measurment conditions listed and may vary depending on the installation situation.

With any deviation to the standard setup, the specific values have to be checked and reviewed once installed or fitted!

For detailed information see page 50 ff.

		n rpm	P_{ed} W	I A	L_pA dB(A)
A	1	1600	115	1,05	62
A	2	1545	137	1,25	57
A	3	1525	150	1,36	52
A	4	1545	137	1,25	55

ebmpapst

- **Technical features:**
  - Collective fault signal floating contact
  - Electronics / motor overtemperature protection
  - Motor current limitation
  - Locked-rotor protection
  - Soft start
- **Cable exit:** Variable
- **Electrical connection:** p. 49
- **Product conforming to standards:** as per list on page 2

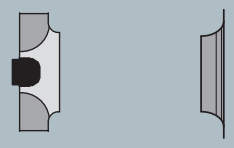

Type	Inlet nozzle
R3G 310-RV00 -01	31000-2-4013

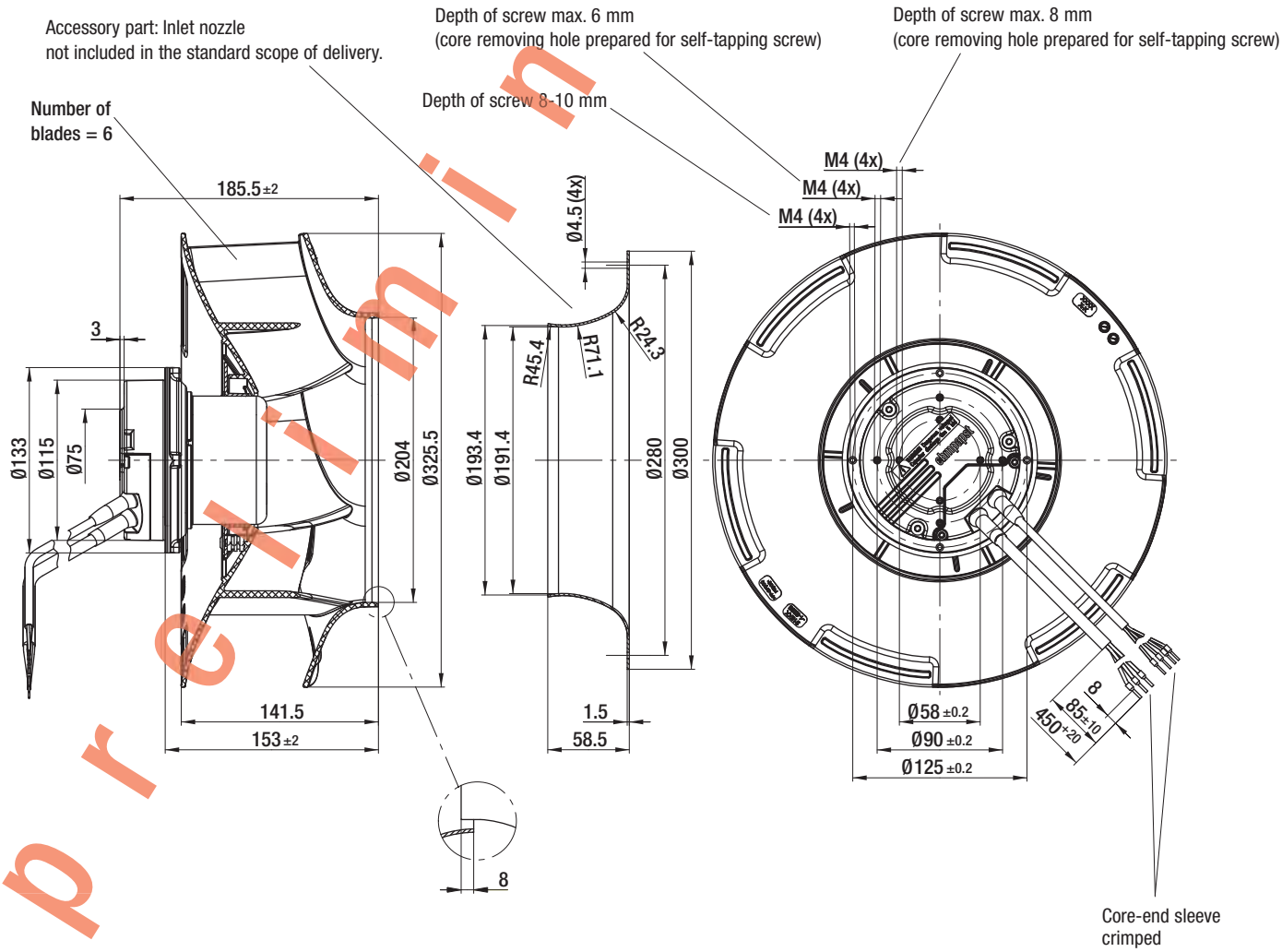

Electr. connection
p. 49

ErP2015 EXCEEDS THE NORM

EC centrifugal fans RadiCal

backward curved, Ø 310

- **Material:** Impeller: PA plastic
  Rotor: Coated in black
  Electronics housing: Die-cast aluminium
- **Number of blades:** 6
- **Direction of rotation:** Clockwise, seen on rotor
- **Type of protection:** IP 54
- **Insulation class:** "B"
- **Mounting position:** Shaft horizontal or Rotor on top, rotor on bottom on request
- **Conensate discharges:** None
- **Mode of operation:** Continuous operation (S1)
- **Bearings:** Maintenance-free ball bearings

Nominal data

Type	Motor	Curve	Nominal voltage	Nominal voltage range	Flow rate	speed/rpm (1)	Max. Input power (1)	Max: Current draw (1)	Sound pressure level (1)	Perm. amb. temp.	Mass	Electr. connection
			VDC	VDC	m³/h	rpm	W	A	dB(A)	°C	kg	
R3G 310-R000 -91 (2)	M3G084-DF	A	110	77-145	1600	1800	250	2,30	56	-40..+60	4,6	p. 49

subject to alterations

(1) Nominal data in operating point with maximum load and 110 VDC (2) Availability scheduled for second quarter 2013

Curves

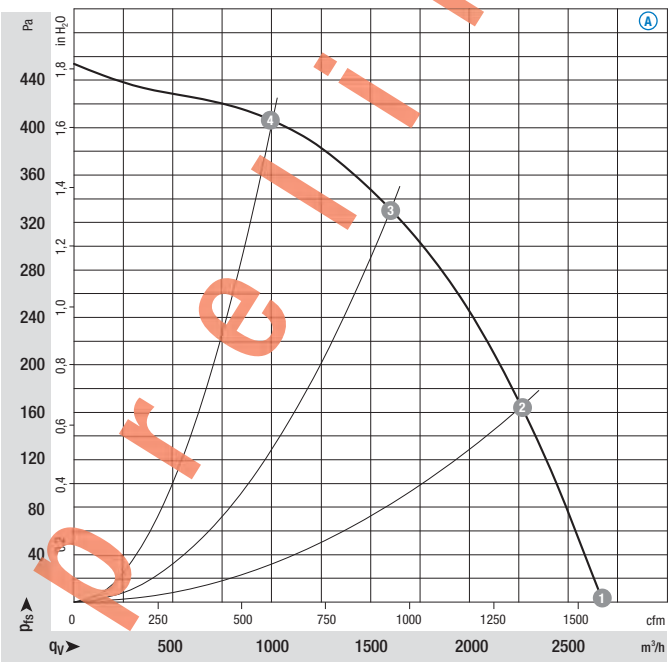

Air performance measured as per: ISO 5801, Installation category A, in ebm-papst full nozzle and without protection against accidental contact

Suction-side noise levels: L_pA measured at 1 m distance to fan axis

The acoustic values given are only valid under the measurment conditions listed and may vary depending on the installation situation.

With any deviation to the standard setup, the specific values have to be checked and reviewed once installed or fitted!

For detailed information see page 50 ff.

		n rpm	P_{ed} W	I A	L_pA dB(A)
A	1	1800	170	1,55	66
A	2	1800	225	2,05	61
A	3	1800	250	2,30	56
A	4	1800	220	2,00	59

ebmpapst

- **Technical features:**
  - Collective fault signal floating contact
  - Electronics / motor overtemperature protection
  - Motor current limitation
  - Locked-rotor protection
  - Soft start
- **Cable exit:** Variable
- **Electrical connection:** p. 49
- **Product conforming to standards:** as per list on page 2

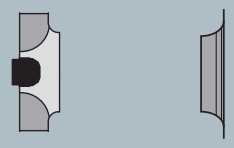

Type	Inlet nozzle
R3G 310-R000 -91	31000-2-4013

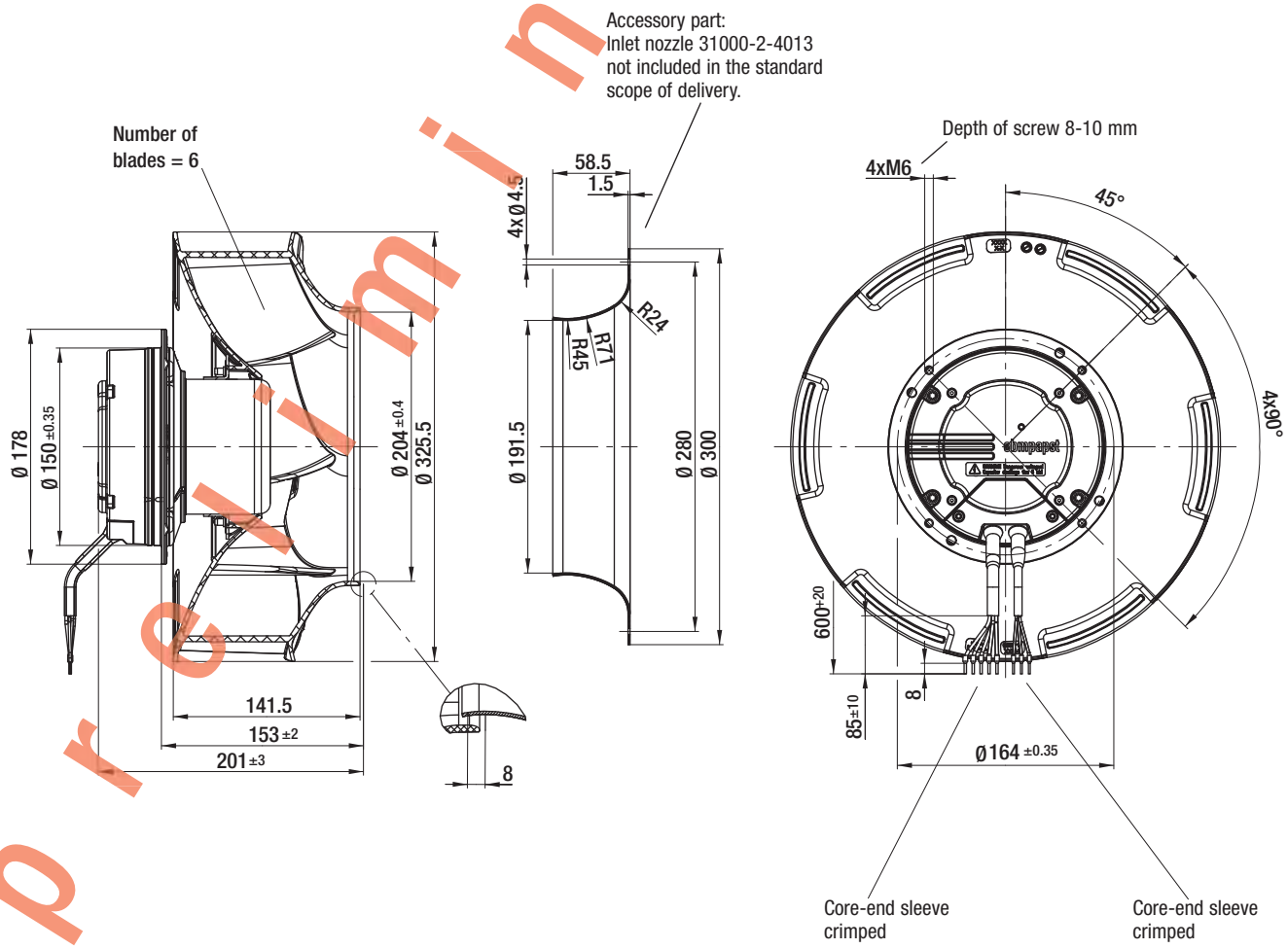

Electr. connection
p. 49

ErP2015 EXCEEDS THE NORM

EC centrifugal fans RadiCal

backward curved, Ø 355

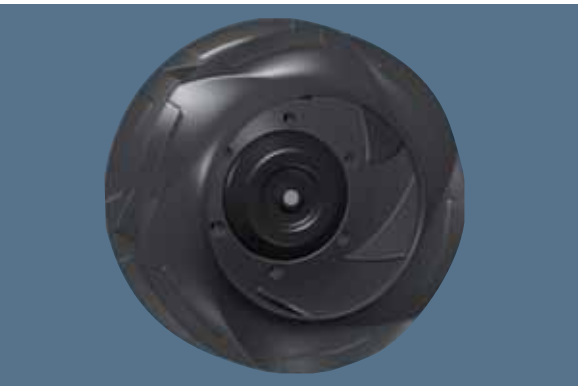

- **Material:** Impeller: PA plastic
  Rotor: Coated in black
  Electronics housing: Die-cast aluminium
- **Number of blades:** 6
- **Direction of rotation:** Clockwise, seen on rotor
- **Type of protection:** IP 54
- **Insulation class:** "B"
- **Mounting position:** Shaft horizontal or Rotor on top, rotor on bottom on request
- **Conensate discharges:** None
- **Mode of operation:** Continuous operation (S1)
- **Bearings:** Maintenance-free ball bearings

Nominal data

Type	Motor	Curve	Nominal voltage	Nominal voltage range	Flow rate	speed/rpm (1)	Max. Input power (1)	Max: Current draw (1)	Sound pressure level (1)	Perm. amb. temp.	Mass	Electr. connection
			VDC	VDC	m³/h	rpm	W	A	dB(A)	°C	kg	
R3G 355-RP00 -91 (2)	M3G084-DF	A	110	77-145	2235	1500	285	2,60	54	-40..+60	5,9	p. 49

subject to alterations

(1) Nominal data in operating point with maximum load and 110 VDC (2) Availability scheduled for second quarter 2013

Curves

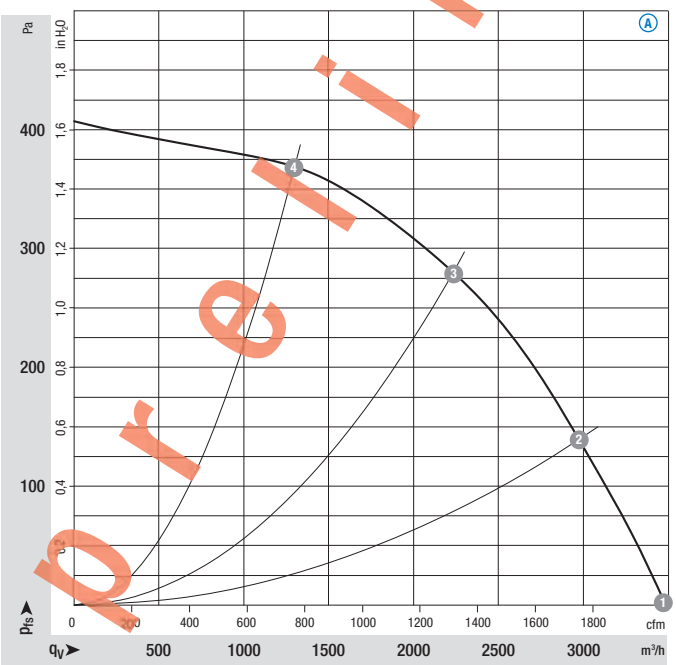

Air performance measured as per: ISO 5801, Installation category A, in ebm-papst full nozzle and without protection against accidental contact

Suction-side noise levels: L_pA measured at 1 m distance to fan axis

The acoustic values given are only valid under the measurment conditions listed and may vary depending on the installation situation.

With any deviation to the standard setup, the specific values have to be checked and reviewed once installed or fitted!

For detailed information see page 50 ff.

		n rpm	P_{ed} W	I A	L_pA dB(A)
A	1	1500	190	1,75	67
A	2	1500	245	2,25	62
A	3	1500	285	2,60	54
A	4	1500	255	2,30	58

ebmpapst

- **Technical features:**
  - Collective fault signal floating contact
  - Electronics / motor overtemperature protection
  - Motor current limitation
  - Locked-rotor protection
  - Soft start
- **Cable exit:** Variable
- **Electrical connection:** p. 49
- **Product conforming to standards:** as per list on page 2

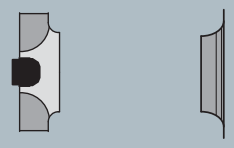

Type	Inlet nozzle
R3G 355-RP00 -91	35500-2-4013

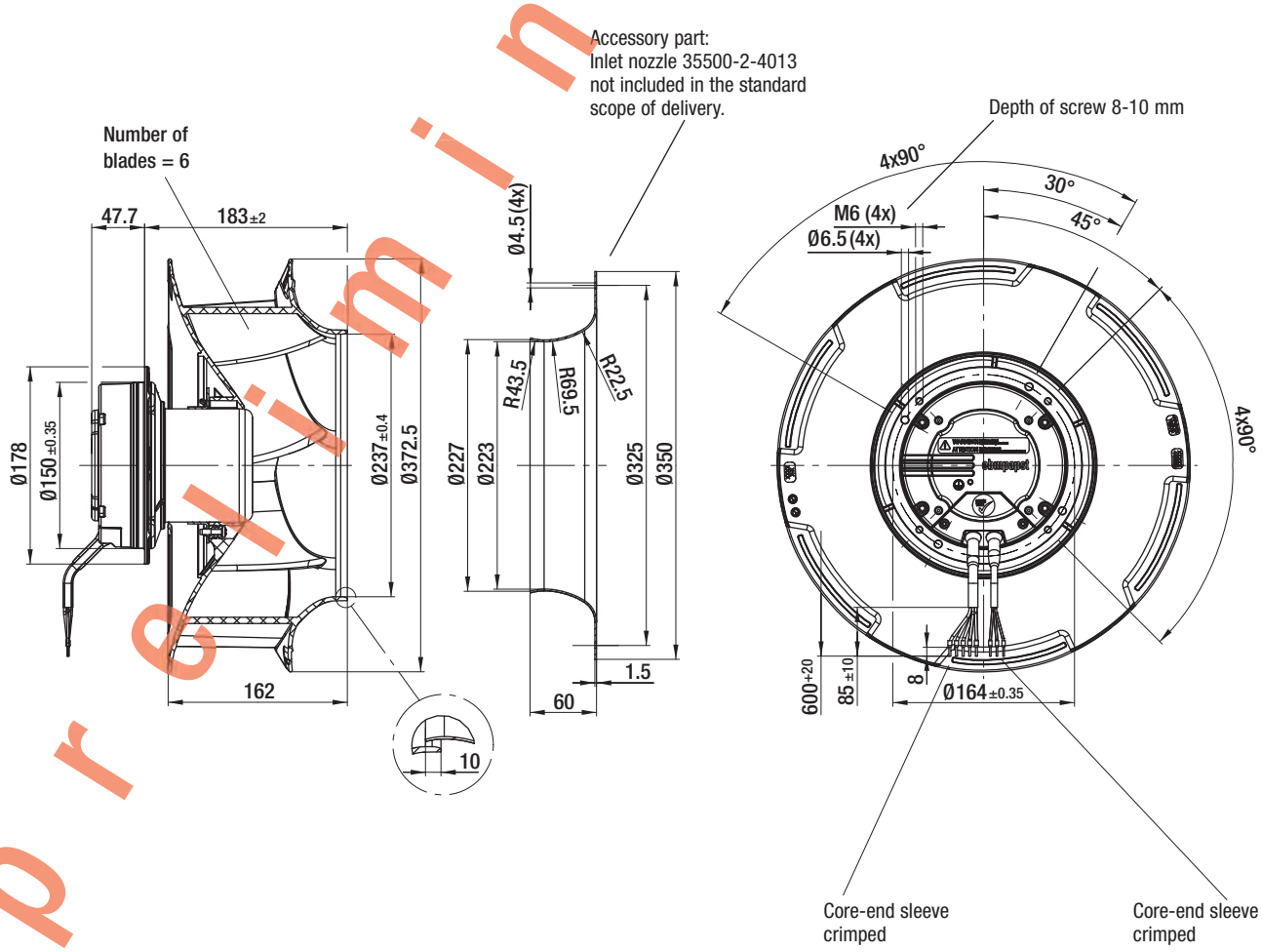

Electr. connection
p. 49

ErP2015 EXCEEDS THE NORM

EC axial fans - HyBlade®

Ø 300

- **Material:** Impeller: PA plastic
  Rotor: Coated in black
  Electronics housing: Die-cast aluminium
- **Number of blades:** 5
- **Direction of rotation:** Counter-clockwise, seen on rotor
- **Type of protection:** IP 44
- **Insulation class:** "B"
- **Mounting position:** Shaft horizontal or Rotor on top, rotor on bottom on request
- **Conensate discharges:** Rotor-side
- **Mode of operation:** Continuous operation (S1)
- **Bearings:** Maintenance-free ball bearings

Nominal data

Type	Motor	Curve	Nominal voltage	Nominal voltage range	Flow rate	speed/rpm (1)	Max. Input power (1)	Max. Current draw (1)	Max. Gegendruck	Sound pressure level (1)	Perm. amb. temp.	Mass	Electr. connection
			VDC	VDC	m³/h	rpm	W	A	Pa	dB(A)	°C	kg	
A3G 300-AT00 -01 (2)	M3G074-CF	A	110	77-145	1605	2020	170	1,55	140	62	-25..+60	2,1	p. 49

subject to alterations

(1) Nominal data in operating point with maximum load and 110 VDC (2) Availability scheduled for second quarter 2013

Curves

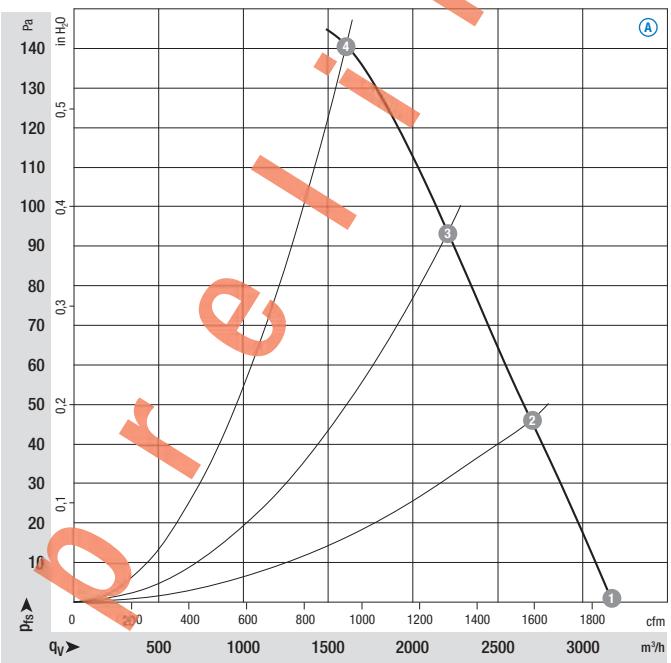

Air performance measured as per: ISO 5801, Installation category A, in ebm-papst full nozzle and without protection against accidental contact

Suction-side noise levels: L_pA measured at 1 m distance to fan axis

The acoustic values given are only valid under the measurment conditions listed and may vary depending on the installation situation.

With any deviation to the standard setup, the specific values have to be checked and reviewed once installed or fitted!

For detailed information see page 50 ff.

		n rpm	P_{ed} W	I A	L_pA dB(A)
A	1	2385	168	1,53	64
A	2	2245	167	1,52	64
A	3	2135	168	1,53	62
A	4	2020	170	1,55	62

ebmpapst

- **Technical features:**
  - Collective fault signal floating contact
  - Electronics / motor overtemperature protection
  - Motor current limitation
  - Locked-rotor protection
  - Soft start
- **Cable exit:** Variable
- **Electrical connection:** p. 49
- **Product conforming to standards:** as per list on page 2

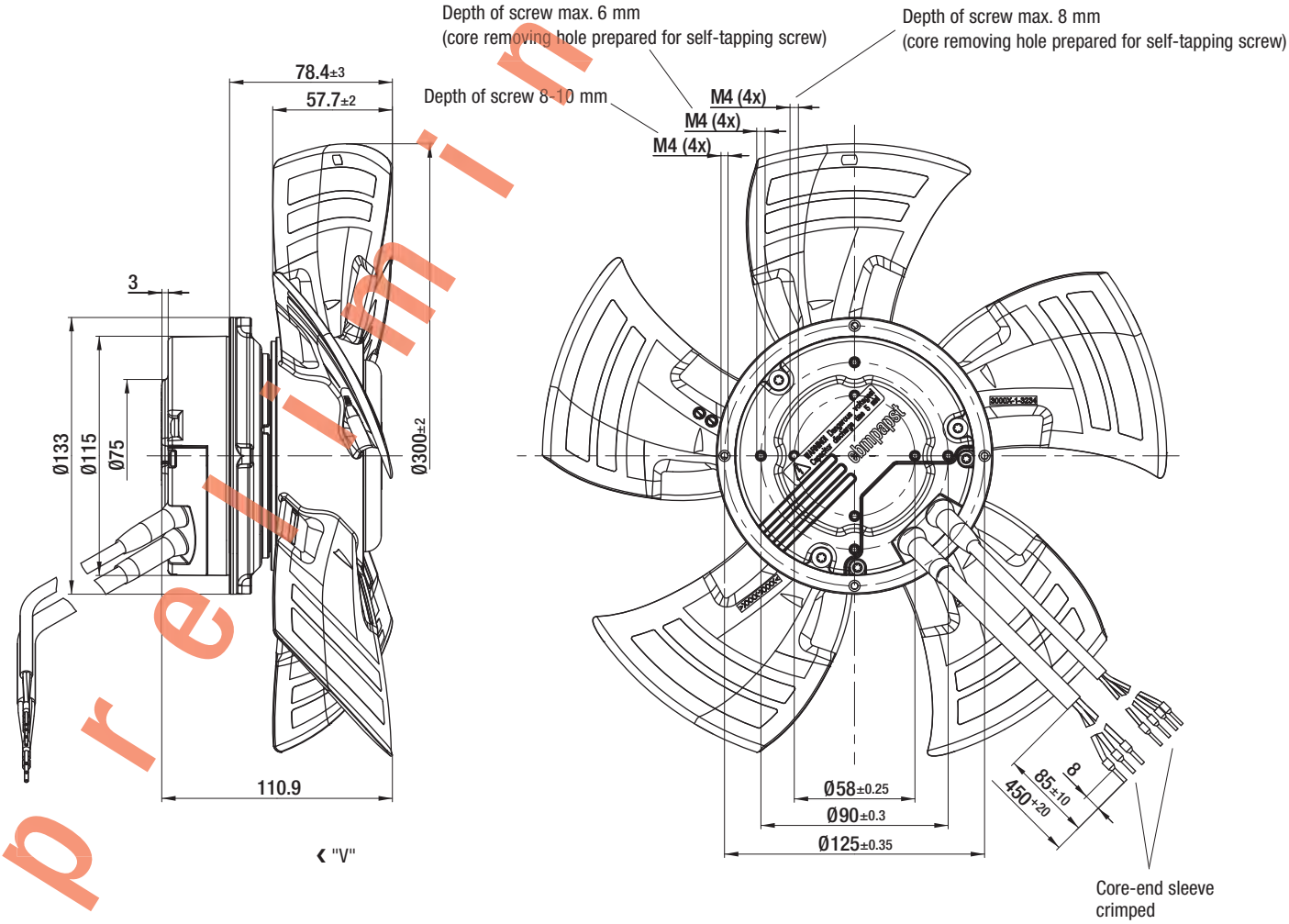

Electr. connection
p. 49

ErP2015 EXCEEDS THE NORM

EC axial fans - HyBlade®

Ø 350

- **Material:** Impeller: PA plastic
  Rotor: Coated in black
  Electronics housing: Die-cast aluminium
- **Number of blades:** 5
- **Direction of rotation:** Counter-clockwise, seen on rotor
- **Type of protection:** IP 44
- **Insulation class:** "B"
- **Mounting position:** Shaft horizontal or Rotor on top, rotor on bottom on request
- **Conensate discharges:** Rotor-side
- **Mode of operation:** Continuous operation (S1)
- **Bearings:** Maintenance-free ball bearings

Nominal data

Type	Motor	Curve	Nominal voltage	Nominal voltage range	Flow rate	speed/rpm (1)	Max. Input power (1)	Max: Current draw (1)	Max. Gegendruck	Sound pressure level (1)	Perm. amb. temp.	Mass	Electr. connection
			VDC	VDC	m³/h	rpm	W	A	Pa	dB(A)	°C	kg	
A3G 350-AT00 -01 (2)	M3G074-CF	A	110	77-145	2150	1475	165	1,50	100	59	-25..+60	2,5	p. 49

subject to alterations

(1) Nominal data in operating point with maximum load and 110 VDC (2) Availability scheduled for second quarter 2013

Curves

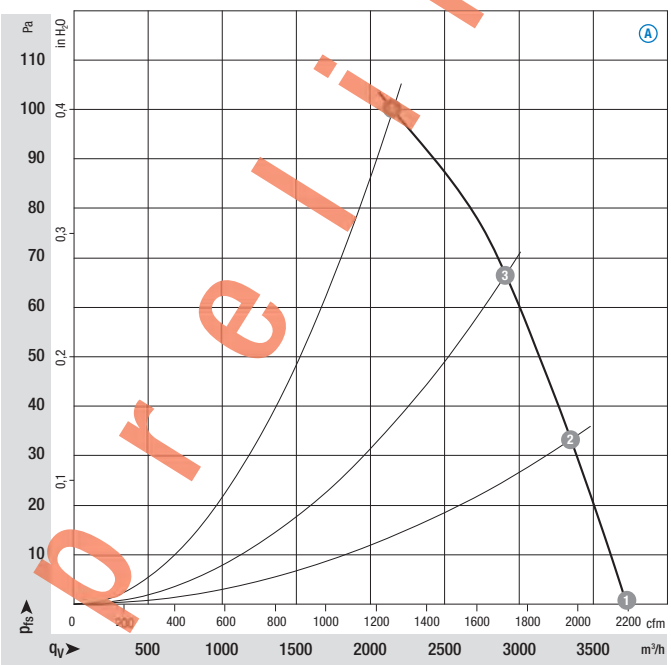

Air performance measured as per: ISO 5801, Installation category A, in ebm-papst full nozzle and without protection against accidental contact

Suction-side noise levels: L_pA measured at 1 m distance to fan axis

The acoustic values given are only valid under the measurment conditions listed and may vary depending on the installation situation.

With any deviation to the standard setup, the specific values have to be checked and reviewed once installed or fitted!

For detailed information see page 50 ff.

		n rpm	P_{ed} W	I A	L_pA dB(A)
A	1	1575	141	1,28	64
A	2	1555	152	1,38	62
A	3	1530	161	1,46	59
A	4	1475	165	1,50	59

ebmpapst

- **Technical features:**
  - Collective fault signal floating contact
  - Electronics / motor overtemperature protection
  - Motor current limitation
  - Locked-rotor protection
  - Soft start
- **Cable exit:** Variable
- **Electrical connection:** p. 49
- **Product conforming to standards:** as per list on page 2

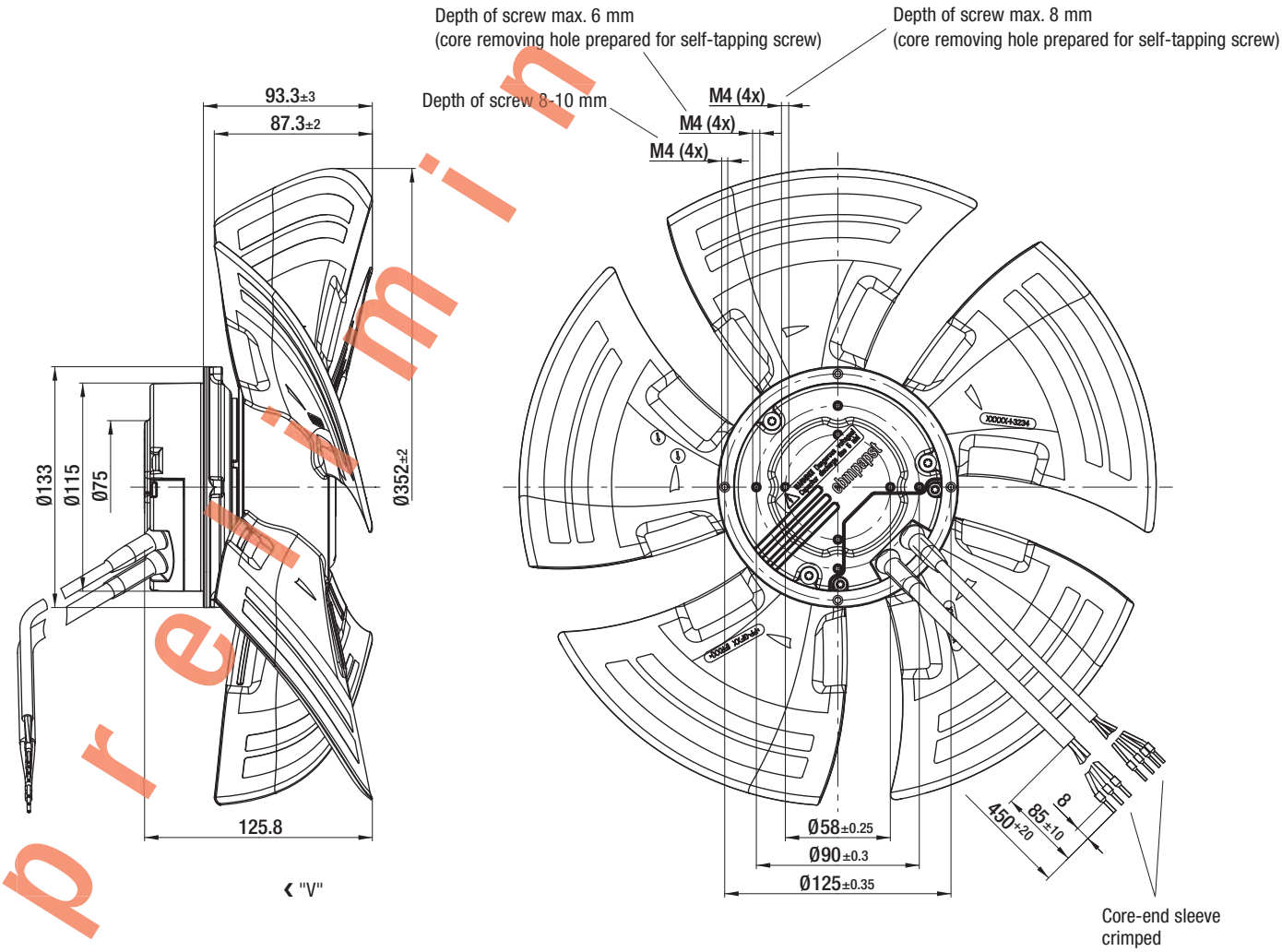

ErP2015 EXCEEDS THE NORM

EC axial fans - HyBlade®

Ø 400

- **Material:** Impeller: PA plastic
  Rotor: Coated in black
  Electronics housing: Die-cast aluminium
- **Number of blades:** 5
- **Direction of rotation:** Counter-clockwise, seen on rotor
- **Type of protection:** IP 54
- **Insulation class:** "B"
- **Mounting position:** Shaft horizontal or Rotor on top, rotor on bottom on request
- **Conensate discharges:** Rotor-side
- **Mode of operation:** Continuous operation (S1)
- **Bearings:** Maintenance-free ball bearings

Nominal data

Type	Motor	Curve	Nominal voltage	Nominal voltage range	Flow rate	speed/rpm (1)	Max. Input power (1)	Max: Current draw (1)	Max. Gegendruck	Sound pressure level (1)	Perm. amb. temp.	Mass	Electr. connection
			VDC	VDC	m³/h	rpm	W	A	Pa	dB(A)	°C	kg	
A3G 400-AC00 -91 (2)	M3G084-FA	A	110	77-145	3400	1630	400	3,64	160	67	-40..+60	4,2	p. 49

subject to alterations

(1) Nominal data in operating point with maximum load and 110 VDC (2) Availability scheduled for second quarter 2013

Curves

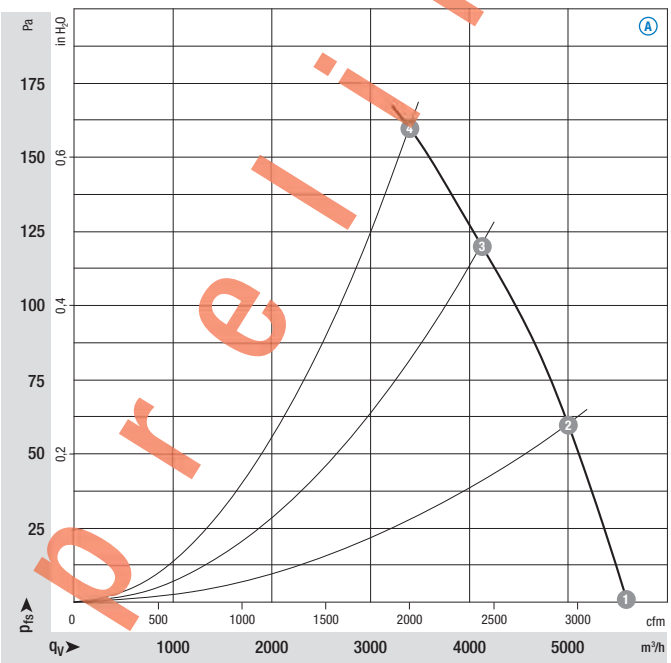

Air performance measured as per: ISO 5801, Installation category A, in ebm-papst full nozzle and without protection against accidental contact

Suction-side noise levels: L_pA measured at 1 m distance to fan axis

The acoustic values given are only valid under the measurment conditions listed and may vary depending on the installation situation.

With any deviation to the standard setup, the specific values have to be checked and reviewed once installed or fitted!

For detailed information see page 50 ff.

		n rpm	P_{ed} W	I A	L_pA dB(A)
A	1	1660	350	3,20	71
A	2	1645	380	3,45	69
A	3	1635	390	3,55	66
A	4	1630	400	3,64	67

ebmpapst

- **Technical features:**
  - Collective fault signal floating contact
  - Electronics / motor overtemperature protection
  - Motor current limitation
  - Locked-rotor protection
  - Soft start
- **Cable exit:** Variable
- **Electrical connection:** p. 49
- **Product conforming to standards:** as per list on page 2

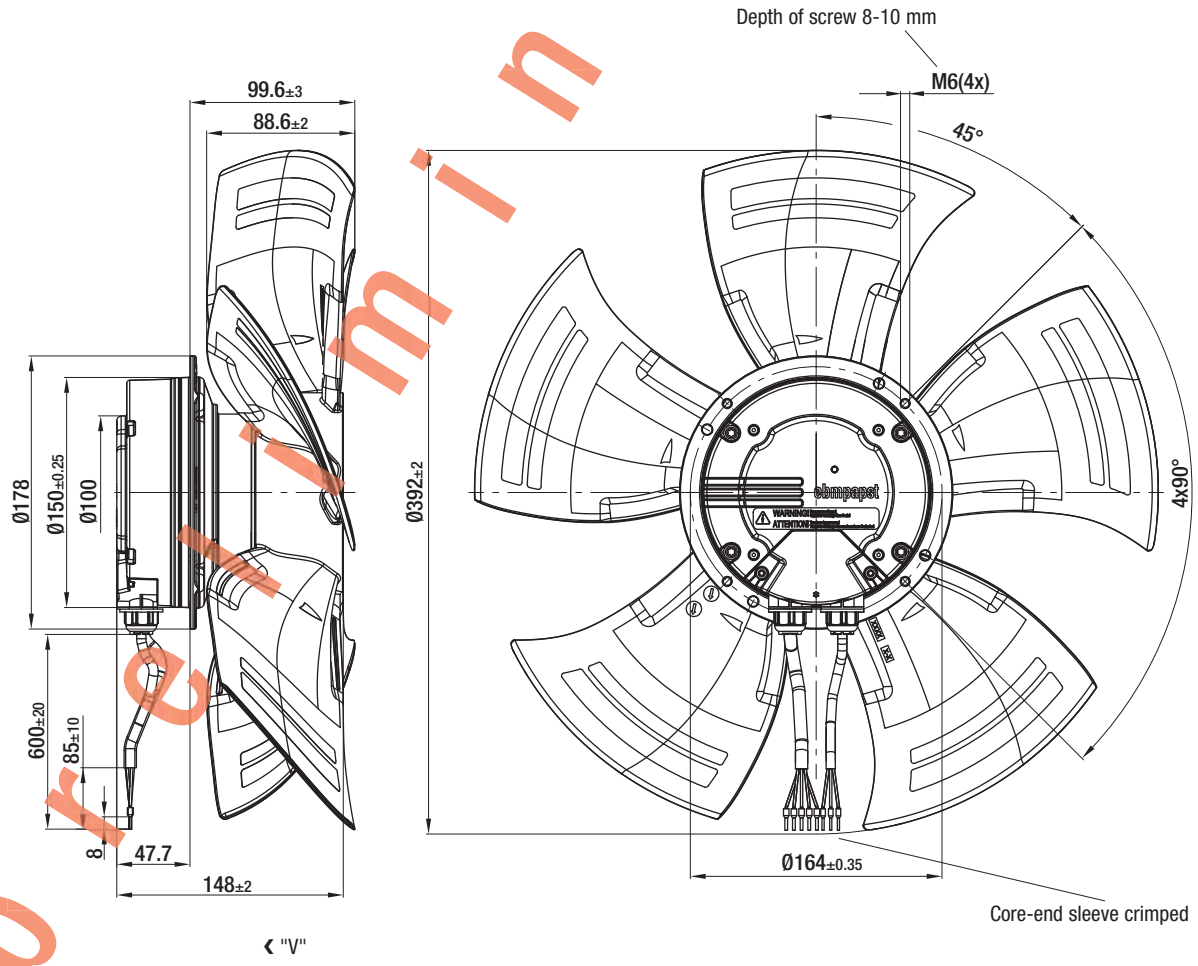

Electr. connection
p. 49

ErP2015 EXCEEDS THE NORM

EC axial fans - HyBlade®

Ø 450

- **Material:** Impeller: PA plastic
  Rotor: Coated in black
  Electronics housing: Die-cast aluminium
- **Number of blades:** 5
- **Direction of rotation:** Counter-clockwise, seen on rotor
- **Type of protection:** IP 54
- **Insulation class:** "B"
- **Mounting position:** Shaft horizontal or Rotor on top, rotor on bottom on request
- **Conensate discharges:** Rotor-side
- **Mode of operation:** Continuous operation (S1)
- **Bearings:** Maintenance-free ball bearings

Nominal data

Type	Motor	Curve	Nominal voltage	Nominal voltage range	Flow rate	speed/rpm (1)	Max. Input power (1)	Max: Current draw (1)	Max. Gegendruck	Sound pressure level (1)	Perm. amb. temp.	Mass	Electr. connection
			VDC	VDC	m³/h	rpm	W	A	Pa	dB(A)	°C	kg	
A3G 450-AC00 -91 (2)	M3G084-FA	A	110	77-145	3990	1300	345	3,15	125	67	-40..+60	4,8	p. 49

subject to alterations

(1) Nominal data in operating point with maximum load and 110 VDC (2) Availability scheduled for second quarter 2013

Curves

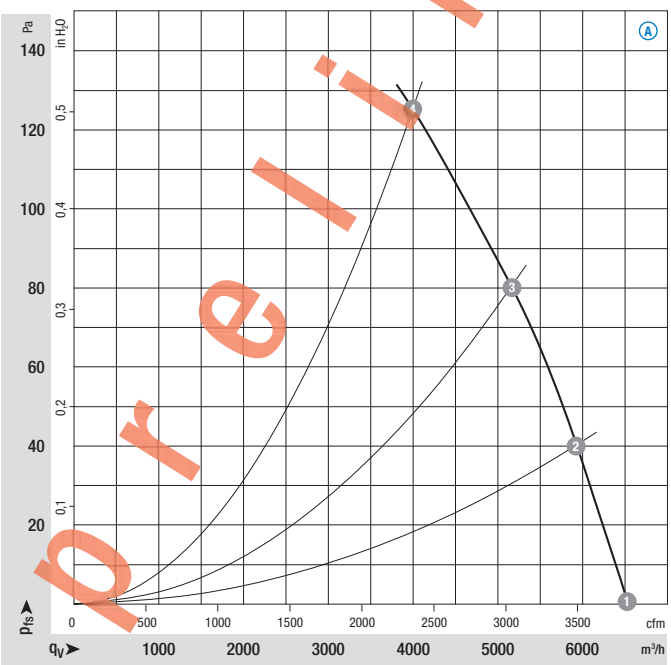

Air performance measured as per: ISO 5801, Installation category A, in ebm-papst full nozzle and without protection against accidental contact

Suction-side noise levels: L_pA measured at 1 m distance to fan axis

The acoustic values given are only valid under the measurment conditions listed and may vary depending on the installation situation.

With any deviation to the standard setup, the specific values have to be checked and reviewed once installed or fitted!

For detailed information see page 50 ff.

		n rpm	P_{ed} W	I A	L_pA dB(A)
A	1	1310	270	2,45	65
A	2	1300	300	2,75	62
A	3	1300	325	2,95	60
A	4	1300	345	3,15	61

ebmpapst

- **Technical features:**
  - Collective fault signal floating contact
  - Electronics / motor overtemperature protection
  - Motor current limitation
  - Locked-rotor protection
  - Soft start
- **Cable exit:** Variable
- **Electrical connection:** p. 49
- **Product conforming to standards:** as per list on page 2

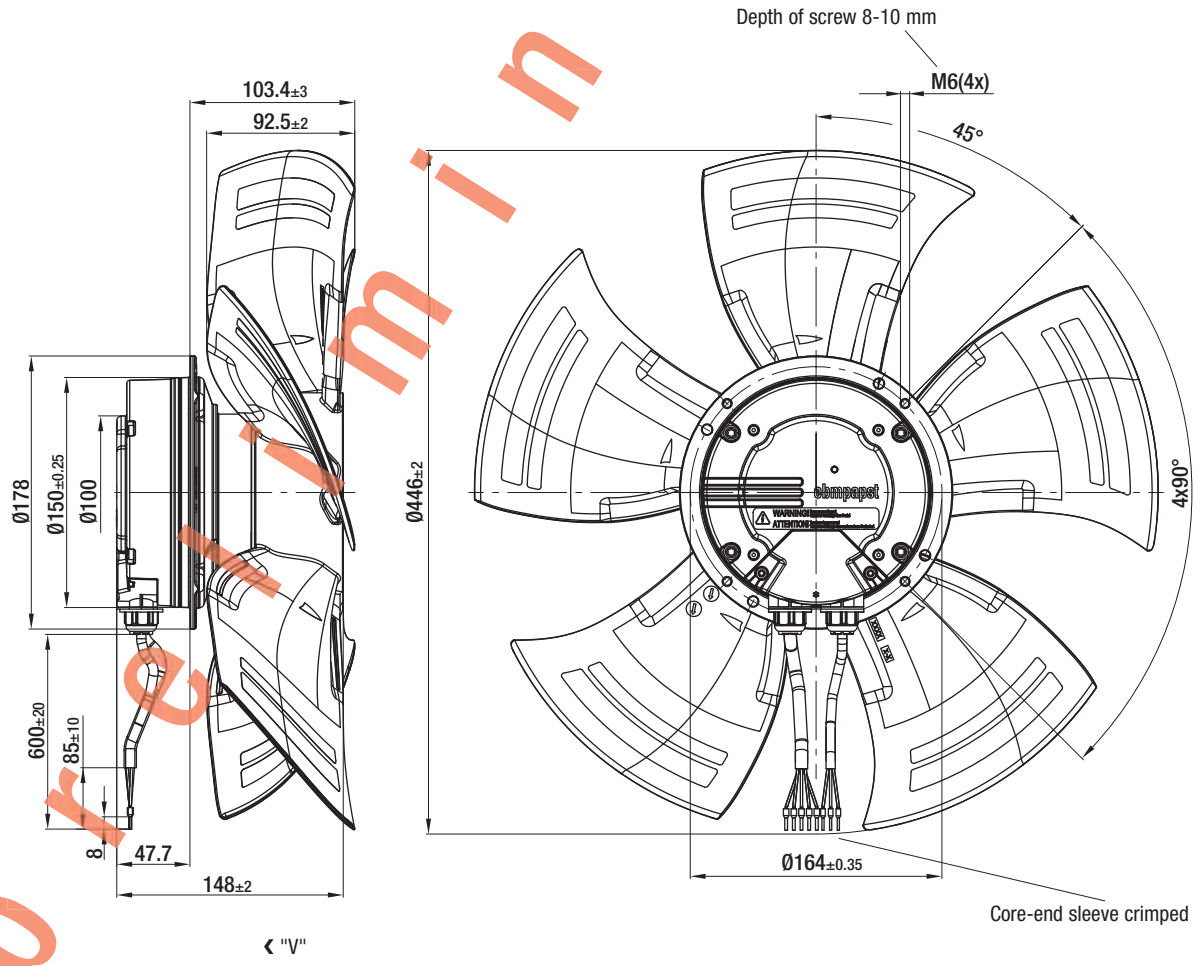

Electr. connection
p. 49

Electrical connections

G) 26 VDC electrical connection (EC dual centrifugal blowers „Power“)

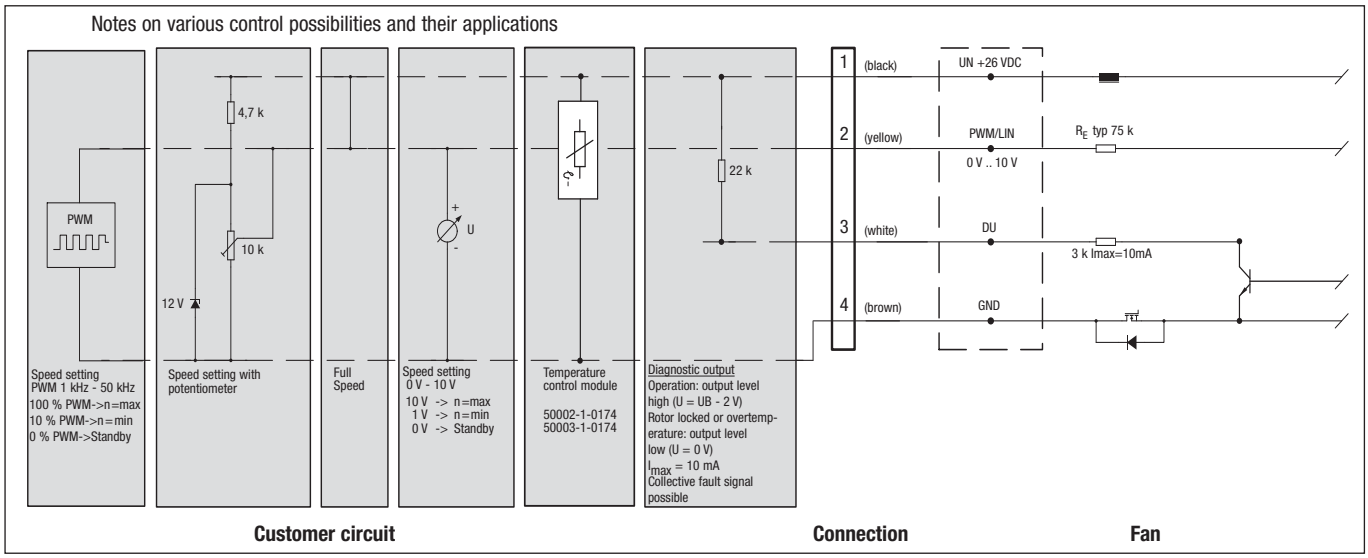

ebmpapst

H) 26 VDC electrical connection

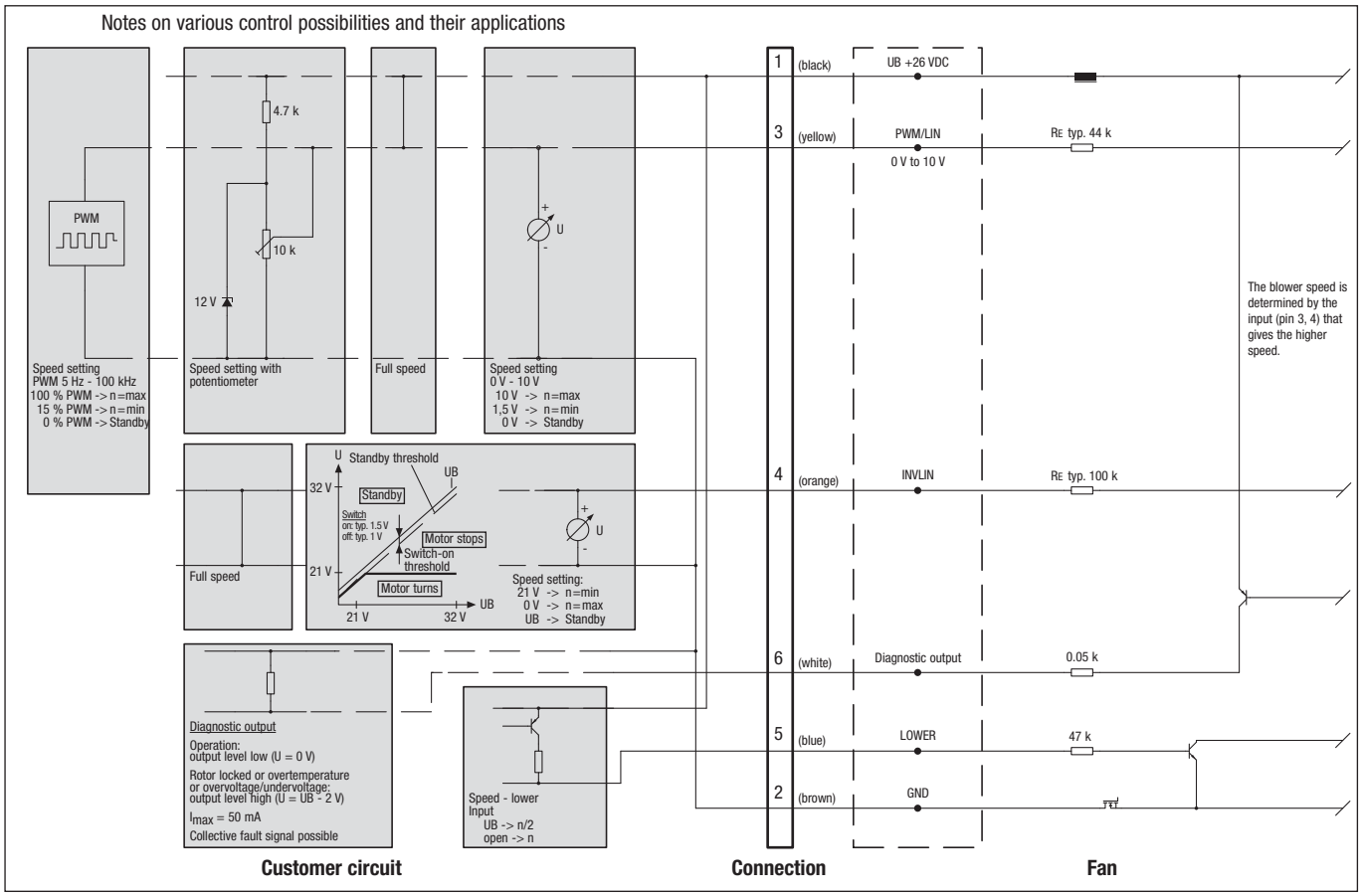

Electrical connections

L) 26 VDC electrical connection (EC axial fans „Power“)

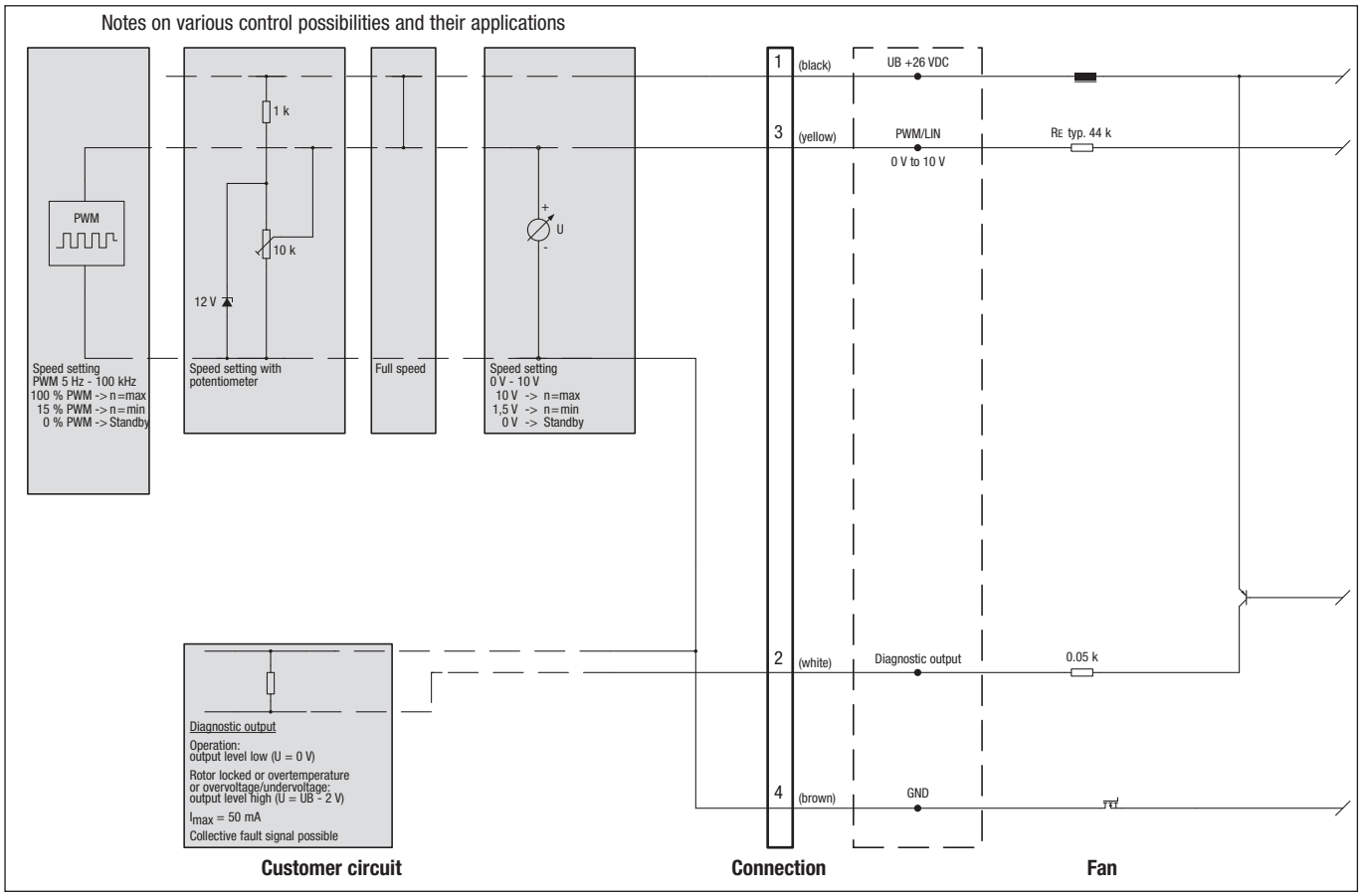

ebmpapst

M) 110 VDC

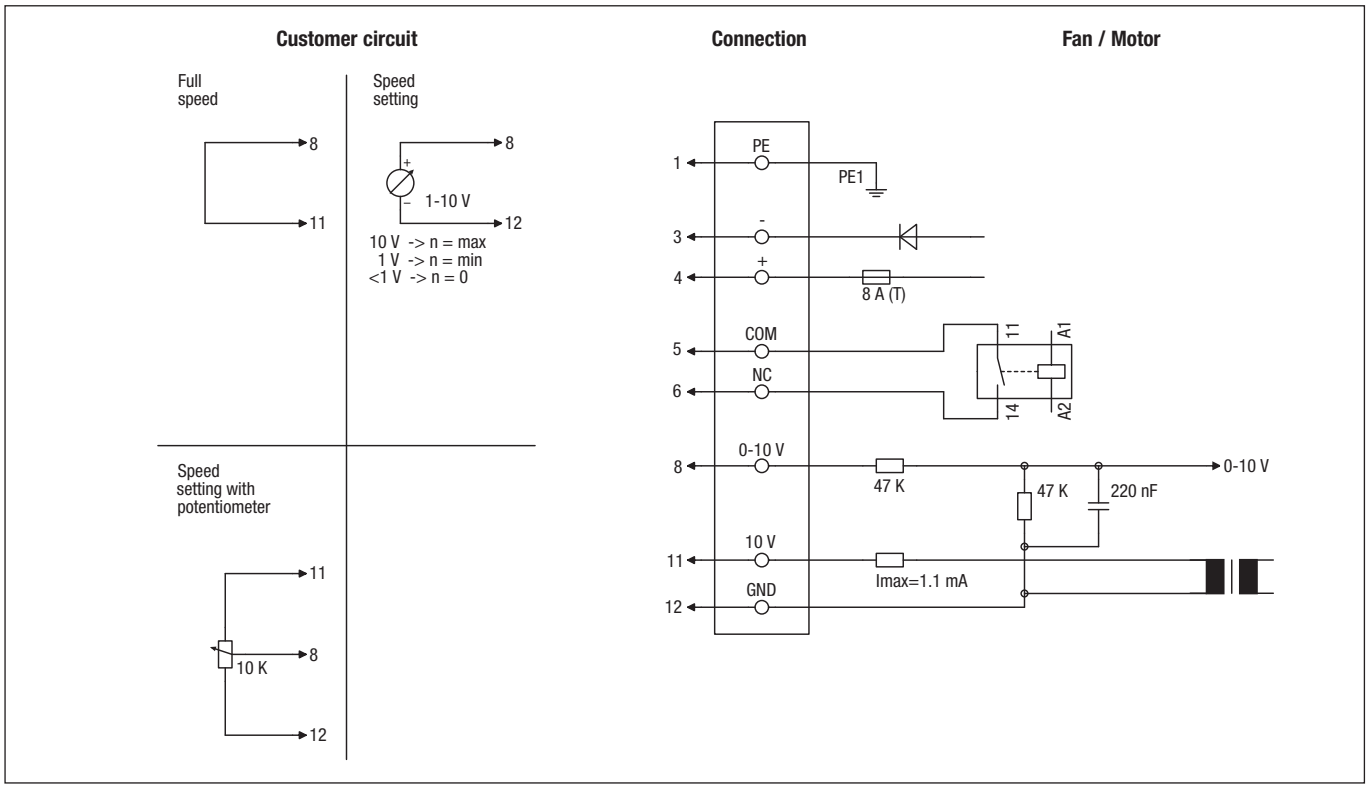

Line	No.	Connection	Colour	Assignment / function
1	1	PE	green/yellow	Protective earth
1	3	-	blue	Supply voltage, GND (110 VDC)
1	4	+	red	Supply voltage, 110 VDC
1	5	COM	white 1	Floating status message contact, normally closed connection (0,6 A-110 VDC, 1 A-80 VDC, 3 A-30 VDC)
1	6	NC	white 2	Floating status message contact, normally closed connection
2	8	0-10 V	yellow	Control input, set value 0-10 VDC, impedance 100 kΩ, SELV
2	11	10 VDC	red	Voltage output 10 VDC (+/- 3 %), max. 1,1 mA, supply voltage for ext. devices (e.g. potentiometer), SELV
2	12	GND	blue	Reference mass for control interface, SELV

Technical parameters & scope

High standards for all ebm-papst products

Here at ebm-papst, we constantly strive to further improve our products in order to be able to offer you the best possible product for your application. Careful monitoring of the market ensures that technical innovations are reflected in the improvements of our products.
Based on the technical parameters listed below and the ambience you want our product to operate in, we here at ebm-papst can always work out the best solution for your specific application.

General performance parameters

Any deviations from the technical data and parameters described here are listed on the product-specific data sheet.

Type of protection

The type of protection is specified in the product-specific data sheets.

Insulation class

The insulation class is specified in the product-specific data sheets.

Mounting position

The mounting position is specified in the product-specific data sheets.

Condensate discharge holes

Information on the condensate discharge holes is provided in the product-specific data sheets.

Mode of operation

The mode of operation is specified in the product-specific data sheets.

Protection class

The protection class is specified in the product-specific data sheets.

Service life

The service life of ebm-papst automotive products depends on:

– The service life of the bearing system

The service life of the bearing system depends mainly on the thermal load on the bearing.

The majority of our products use maintenance-free ball bearings for any mounting position possible.

The service life L10 of the ball bearings can be taken as approx. 40,000 operating hours at an ambient temperature of 40 °C, yet this estimate can vary according to the actual ambient conditions.

We will gladly provide you with a lifetime calculation taking into account your specific operating conditions.

Motor protection / thermal protection

Information on motor protection and thermal protection is provided in the product-specific data sheets.

Depending on motor type and field of application, the following protective features are realised:

– Thermal overload protection (TOP), in-circuit
– PTC/NTC with electronic diagnostics
– Current limitation via electronics

Left: Endurance test room
Middle: Shock test
Right: Chamber test rig



Mechanical strain / performance parameters

All ebm-papst products are subjected to comprehensive tests complying with the normative specifications. In addition to this, the tests also reflect the vast experience and expertise of ebm-papst.

Vibration test

Vibration tests are carried out in compliance with

– Vibration test in operation according to DIN IEC 68, parts 2-6
– Vibration test at standstill according to DIN IEC 68, parts 2-6

Shock load

Shock load tests are carried out in compliance with

– Shock load according to DIN IEC 68, parts 2-27

Balancing quality

Testing the balancing quality is carried out in compliance with

– Residual imbalance according to DIN ISO 1940
– Standard balancing quality level G 6.3

Should you require a higher balancing quality level for your specific application, please let us know and specify this when ordering your product.

Chemo-physical strain / performance parameters

Should you have questions about chemo-physical strain, please direct them to your ebm-papst contact.

Fields of application, industries and applications

Our products are used in various industries and applications: Ventilation, air-conditioning and refrigeration technology, clean room technology, automotive and rail technology, medical and laboratory technology, electronics, computer and office technology, telecommunications, household appliances, heating, machines and plants, drive engineering. Our products are not designed for use in the aviation and aerospace industry!

Legal and normative directives

The products described in this catalogue are designed, developed and produced in keeping with the standards in place for the relevant product and, if known, the conditions governing the relevant fields of application.

Standards

Information on standards is provided in the product-specific data sheets.

EMC

Information on EMC standards is provided in the product-specific data sheets.
Complying with the EMC standards has to be established on the final appliance, as different mounting situations can result in changed EMC properties.

Approvals

In case you require a specific approval for your ebm-papst automotive product (e1, UL, etc.) please let us know.
Most of our products can be supplied with the relevant approval.
Information on existing approvals is provided in the product-specific data sheets.

Air performance measurements

All air performance measurements are carried out on suction side and on chamber test beds conforming to the specifications as per ISO 5801 and DIN 24163. The fans under test are installed in the measuring chamber at free air intake and exhaust (installation category A) and are operated at nominal voltage, with AC also at nominal frequency, and without any additional components such as guard grilles.
As required by the standard, the air performance curves correspond to an air density of 1.2 kg/m^3.

Room for precision noise measuring

Measurement conditions for air and noise measurement

ebm-papst products are measured under the following conditions:

- Axial and diagonal fans in direction of rotation “V” in full nozzle and without guard grille
- Backward curved centrifugal fans, free-running and with inlet nozzle
- Forward curved single and dual inlet centrifugal fans with housing

Noise measurements

All noise measurements are carried out in low-reflective test rooms with reverberant floor. Thus the ebm-papst acoustic test chambers meet the requirements of precision class 1 according to DIN EN ISO 3745. For noise measurement, the fans being tested are placed in a reverberant wall and operated at nominal voltage (for AC, also at nominal frequency) without additional attachments such as the guard grille.

Sound pressure level and sound level

All acoustic values are established according to ISO 13347, DIN 45635 and ISO 3744/3745 to accuracy class 2 and given in A-rated form.
When the sound pressure level (L_p) is measured, the microphone is on the intake side of the fan being tested, usually at a distance of 1 m on the fan axis.
To measure the sound power level (L_w), 10 microphones are distributed over an enveloping surface on the intake side of the fan being tested (see graphic). The sound power level measured can be roughly calculated from the sound pressure level by adding 7 dB.

<u>Measuring configuration</u> as per ISO 13347-3 respectively DIN 45635-38:

● 10 measuring points

$d \geq D$

$h = 1{,}5d \ldots 4{,}5d$

Measurement area $S = 6d^2 + 7d\,(h + 1{,}5d)$

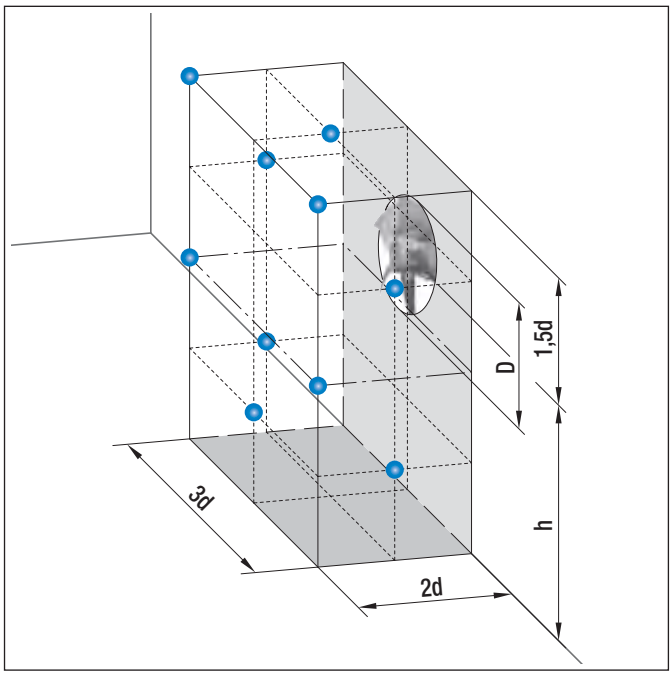

Combined level of multiple same-level sound sources

Adding 2 noise sources with the same level results in a level increase of approx. 3 dB.
The noise characteristics of multiple identical fans can be determined in advance based on the noise values specified in the data sheet. This is shown in the diagram opposite.
Example: 8 A3G800 axial fans are on a condenser. According to the data sheet, the sound pressure level of a fan is approximately 75 dB(A). The level increase measured from the diagram is 9 dB. Thus the overall sound level of the installation can be expected to be 84 dB(A).

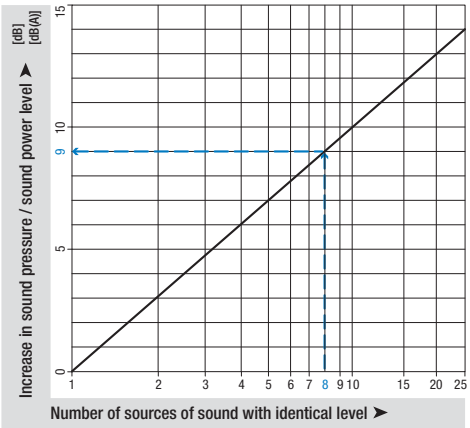

Combined level of two different-level sound sources

The acoustic performance of two different fans can be predetermined based on the sound levels given in the data sheet. This is shown in the diagram opposite.
Example: There is an axial fan A3G800 with a sound pressure level of 75 dB(A) at the operating point and an axial fan A3G710 with 71 dB(A) in a ventilation unit. The level difference is 4 dB. The level increase can now be read in the diagram as approx. 1.5 dB. This means that the overall sound level of the unit can be expected to be 76.5 dB(A).

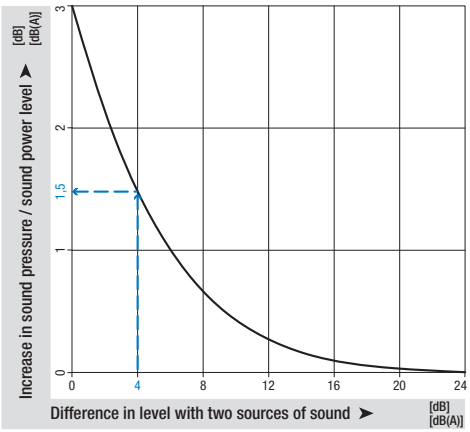

Distance laws

Sound power level is independent of distance to the sound source. In contrast to this, sound pressure level decreases the further away the noise source is. The adjacent diagram shows the decrease in level under far sound field conditions. Far sound field conditions apply whenever the distance between microphone and fan is big when compared to fan diameter and wavelength to be considered. For more information on far sound field, please consult the relevant literature on this complex topic. Per doubling of distance, the level in the far sound field decreases by 6 dB. In the near field of the fan, other correlations apply and the decrease in levels can be considerably smaller. The following example only applies to far sound field conditions and can vary strongly depending on the installation effects:
With an axial fan A3G300, a sound pressure level of 65 dB(A) was measured at a distance of 1 m. According to the adjacent diagram, at a distance of 20 m we would get a reduction by 26 dB, i.e. a sound pressure level of 39 dB(A).

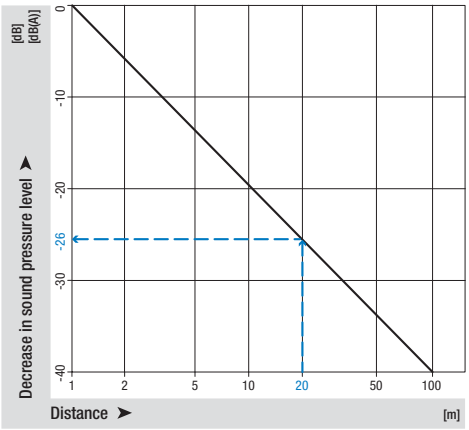

fan agent
compact fan agent
motor specialist
motor agent

ebm-papst in Germany

Germany

ebm-papst
Mulfingen GmbH & Co. KG

Bachmühle 2
D-74673 Mulfingen
Phone +49 7938 81-0
Fax +49 7938 81-110
info1@de.ebmpapst.com

www.ebmpapst.com

ebm-papst
St. Georgen GmbH & Co. KG

Hermann-Papst-Straße 1
D-78112 St. Georgen
Phone +49 7724 81-0
Fax +49 7724 81-1309
info2@de.ebmpapst.com

www.ebmpapst.com

ebm-papst
Landshut GmbH

Hofmark-Aich-Straße 25
D-84030 Landshut
Phone +49 871 707-0
Fax +49 871 707-465
info3@de.ebmpapst.com

www.ebmpapst.com

Berlin
Dipl.-Ing. (TH) Jens Duchow
Händelstraße 7
D-16341 Panketal
Phone +49 30 944149-62
Fax +49 30 944149-63
Jens.Duchow@de.ebmpapst.com

Bielefeld
Dipl.-Ing. (FH) Wolf-Jürgen Weber
Niehausweg 13
D-33739 Bielefeld
Phone +49 5206 91732-31
Fax +49 5206 91732-35
Wolf-Juergen.Weber@de.ebmpapst.com

Dortmund
Dipl.-Ing. (FH) Hans-Joachim Pundt
Auf den Steinern 3
D-59519 Möhnesee-Völlinghausen
Phone +49 2925 800-407
Fax +49 2925 800-408
Hans-Joachim.Pundt@de.ebmpapst.com

Frankfurt
Dipl.-Ing. Christian Kleffmann
Dr.-Hermann-Krause-Straße 23
D-63452 Hanau
Phone +49 6181 1898-12
Fax +49 6181 1898-13
Christian.Kleffmann@de.ebmpapst.com

Halle
Dipl.-Ing. (TU) Michael Hanning
Lercheneck 4
D-06198 Salzatal / OT Lieskau
Phone +49 345 55124-56
Fax +49 345 55124-57
Michael.Hanning@de.ebmpapst.com

Hamburg
Ingenieurbüro Breuell GmbH
Ing. Dirk Kahl
Elektroingenieur
Grützmühlenweg 48
D-22339 Hamburg
Phone +49 40 538092-19
Fax +49 40 538092-84
Dirk.Kahl@de.ebmpapst.com

Heilbronn / Heidelberg
Dipl.-Ing. Mark Gartner
Gehrweg 12
D-74199 Unterheinriet
Phone +49 7130 404569-1
Fax +49 7130 404569-2
Mark.Gartner@de.ebmpapst.com

Kassel
Dipl.-Ing. (FH) Ralph Brück
Hoherainstraße 3 b
D-35075 Gladenbach
Phone +49 6462 4071-10
Fax +49 6462 4071-11
Ralph.Brueck@de.ebmpapst.com

Koblenz
Winfried Schaefer
Hinter der Kirch 10
D-56767 Uersfeld
Phone +49 2657 16-96
Fax +49 2657 16-76
Winfried.Schaefer@de.ebmpapst.com

Munich
Dipl.-Wirt.-Ing. (FH) Jens Peter
Landsbergerstraße 14
D-86932 Pürgen
Phone +49 8196 99877-54
Fax +49 8196 99877-55
Jens.Peter@de.ebmpapst.com

Nuremberg
Dipl.-Wirt.-Ing. (FH) Axel Resch
Steinsfeldstraße 80
D-74626 Bretzfeld
Phone +49 7946 94401-02
Fax +49 7946 94401-03
Axel.Resch@de.ebmpapst.com

Offenburg
Dipl.-Ing. (FH) Ralf Braun
Hubeneck 21
D-77704 Oberkirch
Phone +49 7802 9822-52
Fax +49 7802 9822-53
Ralf.Braun@de.ebmpapst.com

Stuttgart
Dipl.-Ing. (FH) Rudi Weinmann
Hindenburgstraße 100/1
D-73207 Plochingen
Phone +49 7153 9289-80
Fax +49 7153 9289-81
Rudi.Weinmann@de.ebmpapst.com

Ulm
M.Sc. Reinhard Sommerreißer
Am Silbermannpark 10
D-86161 Augsburg
Phone +49 821 6610-7023
Fax +49 821 6610-7024
Reinhard.Sommerreisser@de.ebmpapst.com

Distributors

Frankfurt
R.E.D. Handelsgesellschaft mbH
Gutenbergstraße 3
D-63110 Rodgau - Jügesheim
Phone +49 6106 841-0
Fax +49 6106 841-111
info@red-elektromechanik.de
www.red-elektromechanik.de

Hamburg
Breuell + Hilgenfeldt GmbH
Grützmühlenweg 48
D-22339 Hamburg
Phone +49 40 538092-20
Fax +49 40 538092-84
info@breuell-hilgenfeldt.de

Munich
A. Schweiger GmbH
Ohmstraße 1
D-82054 Sauerlach
Phone +49 8104 897-0
Fax +49 8104 897-90
info@schweiger-gmbh.de
www.schweiger-gmbh.com

● *Express* **Service-Center** (1 to 5 pieces)

North
Breuell + Hilgenfeldt GmbH
Grützmühlenweg 48
D-22339 Hamburg
Phone +49 40 538092-20
Fax +49 40 538092-84
ebmpapst@breuell-hilgenfeldt.de

South
HDS Ventilatoren Vertriebs GmbH
Glaswiesenstraße 1
D-74677 Dörzbach
Phone +49 7937 80355-20
Fax +49 7937 80355-25
info@hds-gmbh.net
www.hds-gmbh.net

ebm-papst in Europe

Europe

Austria
ebm-papst Motoren & Ventilatoren GmbH
Straubingstraße 17
A-4030 Linz
Phone +43 732 321150-0
Fax +43 732 321150-20
info@at.ebmpapst.com
www.ebmpapst.at

Belarus
ebm-papst Bel AgmbH
P.O. Box 117
BY-220138 Minsk
Phone +375 17 3851556
Fax +375 17 3851556
info@by.ebmpapst.com
www.ebmpapst.by

Belgium
ebm-papst Benelux B.V.
Sales office Belgium-Luxemburg
Romeinsestraat 6/0101
Research Park Haasrode
B-3001 Heverlee-Leuven
Phone +32 16 396-200
Fax +32 16 396-220
info@be.ebmpapst.com
www.ebmpapst.be

Bulgaria
ebm-papst Romania S.R.L.
Str. Tarnavei No. 20
RO-500327 Brasov
Phone +40 268 331859
Fax +40 268 312805
dudasludovic@xnet.ro

Croatia
ebm-papst Industries Kft.
Ezred u. 2.
H-1044 Budapest
Phone +36 1 8722-190
Fax +36 1 8722-194
office@hu.ebmpapst.com

Czech Republic / Slovakia
ebm-papst CZ s.r.o.
Kaštanová 34a
CZ-620 00 Brno
Phone +420 544 502-411
Fax +420 547 232-622
info@ebmpapst.cz
www.ebmpapst.cz

Denmark
ebm-papst Denmark ApS
Vallensbækvej 21
DK-2605 Brøndby
Phone +45 43 631111
Fax +45 43 630505
mail@dk.ebmpapst.com
www.ebmpapst.dk

Estonia
ebm-papst Oy, Eesti Filiaal
Kesk tee 13
Aaviku küla, Jüri Tehnopark
EST-75301 Rae Vald, Harjumaa
Phone +372 65569-78
Fax +372 65569-79
www.ebmpapst.ee

Finland
ebm-papst Oy
Puistotie 1
FIN-02760 Espoo
Phone +358 9 887022-0
Fax +358 9 887022-13
mailbox@ebmpapst.fi
www.ebmpapst.fi

France
ebm-papst sarl
ZI Nord - rue A. Mohler
BP 62
F-67212 Obernai Cedex
Phone +33 820 326266
Fax +33 3 88673883
info@ebmpapst.fr
www.ebmpapst.fr

Greece
Helcoma
Th. Rotas & Co OE
Davaki 65
GR-17672 Kallithea-Attiki
Phone +30 210 9513-705
Fax +30 210 9513-490
contact@helcoma.gr
www.helcoma.gr

Hungary
ebm-papst Industries Kft.
Ezred u. 2.
H-1044 Budapest
Phone +36 1 8722-190
Fax +36 1 8722-194
office@hu.ebmpapst.com

Iceland
RJ Engineers
Stangarhyl 1a
IS-110 Reykjavik
Phone +354 567 8030
Fax +354 567 8015
rj@rj.is
www.rj.is

Ireland
ebm-papst UK Ltd.
Chelmsford Business Park
GB-Chelmsford Essex CM2 5EZ
Phone +44 1245 468555
Fax +44 1245 466336
sales@uk.ebmpapst.com
www.ebmpapst.co.uk

AuBren Limited
Portlaoise Business & Technology Park
Mountrath Road
IRL-Portlaoise, Co. Laois
Phone +353 57 8664343
Fax +353 57 8664346
sales@ie.aubren.com
www.aubren.com

Italy
ebm-papst Srl
Via Cornaggia 108
I-22076 Mozzate (Co)
Phone +39 0331 836201
Fax +39 0331 821510
info@it.ebmpapst.com
www.ebmpapst.it

Macedonia
ebm-papst Industries Kft.
Ezred u. 2.
H-1044 Budapest
Phone +36 1 8722-190
Fax +36 1 8722-194
office@hu.ebmpapst.com

fan agent
compact fan agent
motor specialist
motor agent

ebm-papst in Europe

Netherlands
ebm-papst Benelux B.V.
Engelseweg 127
NL-5705 AC Helmond
Phone +31 492 502-900
Fax +31 492 502-950
verkoop@nl.ebmpapst.com
www.ebmpapst.nl

Norway
ebm-papst AS
P.B. 173 Holmlia
N-1203 Oslo
Phone +47 22 763340
Fax +47 22 619173
mailbox@ebmpapst.no
www.ebmpapst.no

Poland
ebm-papst Polska Sp. z o.o.
ul. Annopol 4A
PL-03236 Warszawa
Phone +48 22 6757819
Fax +48 22 6769587
office@ebmpapst.pl
www.ebmpapst.pl

Portugal
ebm-papst (Portugal), Lda.
Centro Empresarial de Alverca
Rua de Adarse, Vale D'Ervas
Corpo D / Fracção 3
P-2615-178 Alverca do Ribatejo
Phone +351 218 394 880
Fax +351 218 394 759
info@pt.ebmpapst.com
www.ebmpapst.pt

Romania
ebm-papst Romania S.R.L.
Str. Tarnavei Nr. 20
RO-500327 Brasov
Phone +40 268 331859
Fax +40 268 312805
dudasludovic@xnet.ro

Russia
ebm-papst Ural GmbH
Posadskaja-Strasse, 23(E), 3
RU-620102 Ekaterinburg
Phone +7 343 2338000
Fax +7 343 2337788
Konstantin.Molokov@ru.ebmpapst.com
www.ebmpapst.ur.ru

ebm-papst Rus GmbH
proezd 4529, vladenie 5, stroenie 1
RU-141000 Mytistschi, Oblast Moskau
Phone +7 495 9807524
Fax +7 495 5140924
info@ebmpapst.ru
www.ebmpapst.ru

Serbia & Montenegro
ebm-papst Industries Kft.
Ezred u. 2.
H-1044 Budapest
Phone +36 1 8722-190
Fax +36 1 8722-194
office@hu.ebmpapst.com

Spain
ebm-papst Ibérica S.L.
Avda. del Sistema Solar, 29
E-28830 San Fernando de Henares (Madrid)
Phone +34 91 6780894
Fax +34 91 6781530
ventas@ebmpapst.es
www.ebmpapst.es

Sweden
ebm-papst AB
Äggelundavägen 2
S-17562 Järfälla
Phone +46 10 4544400
Fax +46 8 362306
info@ebmpapst.se
www.ebmpapst.se

Switzerland
ebm-papst AG
Rütisbergstrasse 1
CH-8156 Oberhasli
Phone +41 44 73220-70
Fax +41 44 73220-77
verkauf@ebmpapst.ch
www.ebmpapst.ch

Turkey
Akantel Elektronik San. Tic. LTD. Sti.
Atatürk Organize Sanayi
Bölgesi 10007 SK. No.:6
TR-35620 Cigli-Izmir
Phone +90 232 3282090
Fax +90 232 3280270
akantel@akantel.com.tr
www.ebmpapst.com.tr

Ukraine
ebm-papst Ukraine LLC
Lepse Boulevard, 4, Building 21
UA-03067 Kiev
Phone +38 044 2063091
Fax +38 044 2063091
mail@ebmpapst.ua
www.ebmpapst.ua

United Kingdom
ebm-papst UK Ltd.
Chelmsford Business Park
GB-Chelmsford Essex CM2 5EZ
Phone +44 1245 468555
Fax +44 1245 466336
sales@uk.ebmpapst.com
www.ebmpapst.co.uk

ebm-papst Automotive & Drives (UK) Ltd.
The Smithy
Fidlers Lane
GB-East Ilsley, Berkshire RG20 7LG
Phone +44 1635 2811-11
Fax +44 1635 2811-61
A&Dsales@uk.ebmpapst.com
www.ebmpapst-ad.com

ebm-papst in America and Africa

America

Argentina
ebm-papst de Argentina S.A.
Hernandarias 148 Lomas del Mirador
Pcia. de Buenos Aires (1752)
Phone +54 11 46576135
Fax +54 11 46572092
ventas@ar.ebmpapst.com
www.ebmpapst.com.ar

Brazil
ebm-papst Motores Ventiladores Ltda.
Av. José Giorgi, 301 Galpões B6+B7
Condominio Logical Center
BR-06707-100 Cotia - São Paulo
Phone +55 11 4613-8700
Fax +55 11 4777-1456
vendas@br.ebmpapst.com
www.ebmpapst.com.br

Canada
ebm-papst Canada Inc.
1800 Ironstone Manor, Unit 2
CDN-Pickering, Ontario, L1W3J9
Phone +1 905 420-3533
Fax +1 905 420-3772
sales@ca.ebmpapst.com
www.ebmpapst.ca

Mexico
ebm Industrial S. de R.L. de C.V.
Paseo de Tamarindos 400-A-5to Piso
Col. Bosques de las Lomas
MEX-Mexico 05120, D.F.
Phone +52 55 3300-5144
Fax +52 55 3300-5243
sales@mx.ebmpapst.com
www.ebmpapst.com.mx

USA
ebm-papst Inc.
P.O. Box 4009
100 Hyde Road
USA-Farmington, CT 06034
Phone +1 860 674-1515
Fax +1 860 674-8536
sales@us.ebmpapst.com
www.ebmpapst.us

ebm-papst Automotive & Drives, Inc.
3200 Greenfield, Suite 255
USA-Dearborn, MI 48120
Phone +1 313 406-8080
Fax +1 313 406-8081
automotive@us.ebmpapst.com
www.ebmpapst-automotive.us

Africa

South Africa
ebm-papst South Africa (Pty) Ltd.
P.O. Box 3124
1119 Yacht Avenue
ZA-2040 Honeydew
Phone +27 11 794-3434
Fax +27 11 794-5020
info@za.ebmpapst.com
www.ebmpapst.co.za

fan agent
compact fan agent
motor specialist
motor agent

ebm-papst in Asia and Australia

Asia

China
ebm-papst Ventilator (Shanghai) Co., Ltd.
No. 418, Huajing Road
WaiGaoQiao Free Trade Zone
No. 2001, Yang Gao (N) Road
VRC-200131 Shanghai, P.R. of China
Phone +86 21 5046-0183
Fax +86 21 5046-1119
sales@cn.ebmpapst.com
www.ebmpapst.com.cn

Hong Kong
ebm-papst Hong Kong Ltd.
Unit No. 13,9 / F
Technology Park, 18 On Lai Street
Siu Lek Yuen, Shatin N.T.
Hong Kong - P.R. of China
Phone +852 2145-8678
Fax +852 2145-7678
info@hk.ebmpapst.com

India
ebm-papst India Pvt. Ltd.
26/3, G.N.T. Road, Erukkencherry
IND-Chennai-600118
Phone +91 44 25372556
Fax +91 44 25371149
sales@in.ebmpapst.com
www.ebmpapst.in

Indonesia
ebm-papst Indonesia
Representative Office
German Centre, 4th Floor, Suite 4470
Jl. Kapt. Subijono Dj. Bumi Serpong Damai
RI-15321 Tangerang
Phone +62 21 5376250
Fax +62 21 5388305
salesdept@id.ebmpapst.com

Israel
Polak Bros. Import Agencies Ltd.
9 Hamefalsim Street
IL-Kiryat Arie, Petach-Tikva 49514
Phone +972 3 9100300
Fax +972 3 5796679
polak@polak.co.il
www.polak.co.il

Japan
ebm-papst Industries Japan K.K.
12th Floor, Benex S-3 Bldg.
3-20-8 Shinyokohama, Kohoku-ku
J-222-0033 Yokohama
Phone +81 45 47057-51
Fax +81 45 47057-52
info@jp.ebmpapst.com
www.ebmpapst.jp

Korea
ebm-papst Korea Co. Ltd.
6F, Trutec Bldg.
B 6-2, Digital Media City (DMC)
Sangam-Dong, Mapo-Gu
ROK-Seoul 121-270
Phone +82 2 366213-24
Fax +82 2 366213-26
info@kr.ebmpapst.com
www.ebmpapst.co.kr

Malaysia
ebm-papst Malaysia
Representative Office
Unit 12-2, Jalan USJ Sentral 3
Persiaran Subang, Selangor Darul Ehsan
MAL-47600 Subang Jaya
Phone +60 3 8024-1680
Fax +60 3 8024-8718
salesdept@my.ebmpapst.com

Singapore
ebm-papst SEA Pte. Ltd.
No. 23 Ubi Road 4
#06-00 Olympia Industrial Building
SGP-Singapore 408620
Phone +65 65513789
Fax +65 68428439
salesdept@sg.ebmpapst.com

Taiwan
ETECO Engineering & Trading Corp.
10F-I, No. 92, Teh-Wei Str.
RC-Tsow-Inn District, Kaohsiung
Phone +886 7 557-4268
Fax +886 7 557-2788
eteco@ms22.hinet.net
www.ebmpapst.com.tw

Thailand
ebm-papst Thailand Co., Ltd.
99/9 Moo 2, Central Chaengwattana Tower
14th Floor, Room 1402
Chaengwattana Road Bangtarad, Pakkret
THA-11120 Nonthaburi
Phone +66 2 8353785-7
Fax +66 2 8353788
salesdept@th.ebmpapst.com

United Arab Emirates
ebm-papst Middle East FZE
PO Box 17755
Jebel Ali Free Zone / FZS1 / AP05
UAE-Dubai
Phone +971 4 88608-26
Fax +971 4 88608-27
info@ae.ebmpapst.com
www.ebmpapst.ae

Vietnam
ebm-papst Vietnam
Representative Office
Room #102, 25 Nguyen Van Thu Street
District 1
VN-Ho Chi Minh City
Phone +84 8 39104099
Fax +84 8 39103970
linh.nguyen@vn.ebmpapst.com

Australia

Australia
ebm-papst A&NZ Pty Ltd.
10 Oxford Road
AUS-Laverton North, Victoria, 3026
Phone +61 3 9360-6400
Fax +61 3 9360-6464
sales@ebmpapst.com.au
www.ebmpapst.com.au

New Zealand
ebm-papst A&NZ Pty Ltd.
102 Henderson Valley Road
NZ-Henderson, Auckland 1230
Phone +64 9 837-1884
Fax +64 9 837-1899
sales@ebmpapst.com.au
www.ebmpapst.com.au

Printed in Germany

ebm-papst
Mulfingen GmbH & Co. KG

Bachmühle 2
D-74673 Mulfingen
Phone +49 7938 81-0
Fax +49 7938 81-110
info1@de.ebmpapst.com

www.ebmpapst.com

ebmpapst